Smart Sensors (with Ultra-High-Speed CCD Camera)

ZFV Series

NEW

Ordering Information

Sets of Sensor Head and Amplifier Unit

Type	NPN	PNP
Narrow View/Single Function	ZFV-R1010	ZFV-R1015
Narrow View/Standard	ZFV-R1020	ZFV-R1025
Wide View/Single Function	ZFV-R5010	ZFV-R5015
Wide View/Standard	ZFV-R5020	ZFV-R5025

Sensor Heads

Appearance	Type	Working length	Sensing area	Model
	Narrow View	34 to 49 mm (variable)	5 × 4.6 mm (H × V) to 9 × 8.3 mm (H × V)	ZFV-SR10
	Wide View	38 to 194 mm (variable)	10 × 9.2 mm (H × V) to 50 × 46 mm (H × V)	ZFV-SR50

Amplifier Units

Appearance	Type	Power supply	Output type	Model
	Single Function	24 VDC ± 10%	NPN	ZFV-A10
			PNP	ZFV-A15
	Standard		NPN	ZFV-A20
			PNP	ZFV-A25

Accessories (Order Separately)

Data Storage Units

Appearance	Power supply	Output type	Model
	24 VDC	NPN	ZS-DSU11
		PNP	ZS-DSU41

Controller Link Unit

Appearance	Model
	ZS-XCN

Panel-mounting Adapter

Appearance	Model	
	ZS-XPM1	First Unit
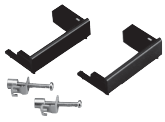	ZS-XPM2	Additional Units (for expansion)

Sensor Head Extension Cable

Cable length	Model	Quantity
3 m	ZFV-XC3B (See note.)	1
8 m	ZFV-XC8B	1

Note: ZFV-XC3BR Robot Cable is also available.

Specifications

Sensor Heads

Item	ZFV-SR10 (Narrow View)	ZFV-SR50 (Wide View)
Setting distance (L)	34 to 49 mm	38 to 194 mm
Detection range (H × V)	5 × 4.6 mm to 9 × 8.3 mm	10 × 9.2 mm to 50 × 46 mm
Relation between setting distance and detection range	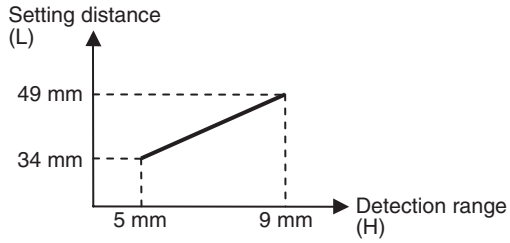	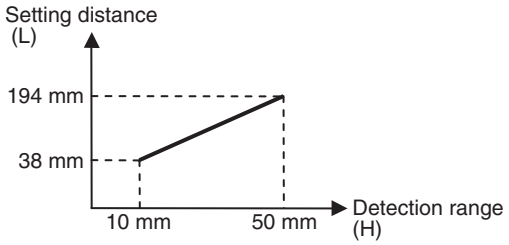
Guide light	Provided (center, sensing area)	
Built-in lens	Focus: f15.65	Focus: f13.47
Object lighting method	Pulse lighting	
Object light source	Eight red LEDs	
Sensing element	1/3-inch CCD, partial scan	
Shutter	Electronic shutter, shutter time: 1/1,000 to 1/4,000	
Power supply voltage	15 VDC (Supplied from Amplifier Unit.)	
Current consumption	Approx. 200 mA	
Dielectric strength	1,000 VAC, 50/60 Hz for 1 min	
Vibration resistance (destruction)	10 to 150 Hz, 0.35-mm single amplitude, 10 times each in X, Y, and Z directions for 8 min	
Shock resistance (destruction)	150 m/s^2, three times each in six directions (up/down, left/right, forward/backward)	
Ambient temperature	Operating: 0 to 40°C, Storage: –25 to 65°C (with no icing or condensation)	
Ambient humidity	Operating and storage: 35% to 85% (with no condensation)	
Ambient atmosphere	Must be free of corrosive gas.	
Connection method	Prewired, Standard cable length: 2 m	
Degree of protection	IEC60529, IP65	
Materials	Case: ABS, Mounting bracket: PBT	
Weight	Approx. 200 g (including mounting bracket and cord)	
Accessories	Mounting bracket (1), Ferrite core (1), Instruction sheet	

Amplifier Units

Item		Single-function models		Standard models	
		ZFV-A10	ZFV-A15	ZFV-A20	ZFV-A25
Output method		NPN	PNP	NPN	PNP
Inspection items		Pattern (PTRN), Brightness (BRGT)		Patterns (PTRN), Brightness (BRGT), Area (AREA), Width (WID), Position (POSI), Count (CNT), Characters (CHAR)	
Teaching area		Rectangular, one area			
Teaching area size		• Pattern (PTRN), Brightness (BRGT): Any rectangular area (256 × 256 max.) • Area (AREA), Width (WID), Position (POSI), Count (CNT), Characters (CHAR): Any rectangular area (full screen max.)			
Sensing area		Full screen			
Resolution		468 × 432 (H × V) max.			
Bank selection		Supported for 8 banks.			
Response time		Pattern (PTRN), Brightness (BRGT): High-speed: 4 ms, Standard: 8 ms, High-precision: 12 ms Area (AREA), Width (WID), Position (POSI), Count (CNT), Characters (CHAR): 128 × 128: 15 ms max.			
Other functions		Control output switching: ON for OK or ON for NG ON delay/OFF delay, One-shot output, “ECO” mode			
Output signals		(1) Control output (OUTPUT), (2) Enable output (ENABLE), (3) Error output (ERROR)			
Input signals		(1) Simultaneous measurement input (TRIG) or Continuous measurement input (TRIG), Switched by using menu. (2) Bank selection inputs (BANK1 to BANK3) (3) Workpiece still teaching (TEACH) or Workpiece moving teaching (TEACH), Switched by using menu.			
Con-necting to ZS-DSU	Image logging trigger	Stores NG images or all images.			
	Sampling rate	ZFV measurement cycle (See note 1.)			
	Number of logged image	Logs up to 128 images in series			
	Number of connected	15 max. (ZFV: 5 Units max., ZS-LDC: 9 Units max., ZS-MDC (See note 2.): 1 Unit max.)			
	External bank function	Amplifier Unit setting data can be saved to the memory card as bank data. Reading bank data enables bank switching.			
Sensor Head interface		Digital interface			
Image display		Compact TFT 1.8-inch LCD (Display dots: 557 × 234)			
Indicators		• Judgement result indicator (OUTPUT) • Inspection mode indicator (RUN)			
Operation interface		• Cursor keys (up, down, left, right) • Setting key (SET) • Escape key (ESC) • Operating mode switching (slide switch) • Menu switching (slide switch) • Teaching/Display switching key (TEACH/VIEW)			
Power supply voltage		20.4 to 26.4 VDC (including ripple)			
Current consumption		600 mA max. (with Sensor Head connected)			
Dielectric strength		1,000 VAC, 50/60 Hz for 1 min between leads and Amplifier Unit case			
Noise immunity		1 kV, Pulse rise: 5 ns, Pulse width: 50 ns, Burst duration: 15 ms, Cycle: 300 ms			
Vibration resistance		Destruction: 10 to 150 Hz, 0.1-mm single amplitude, 10 times each in X, Y, and Z directions for 8 min			
Shock resistance		Destruction: 150 m/s^2, three times each in six directions (up/down, left/right, forward/backward)			
Ambient temperature		Operating: 0 to 50°C Storage: −25 to 65°C (with no icing or condensation)			
Ambient humidity		Operating and storage: 35% to 85%			
Ambient atmosphere		Must be free of corrosive gas.			
Degree of protection		IEC60529, IP20			
Materials		Polycarbonate			
Weight		Approx. 300 g (including cord)			
Accessories		Ferrite core (1), Instruction sheet			

Note 1. This is the sampling rate when logging images. To log measurement data only, use the ZS-DSU settings.
2. Image logging is not possible when the ZS-MDC is connected.

Dimensions

Note: All units are in millimeters unless otherwise indicated.

Sensor Heads

ZFV-SR□

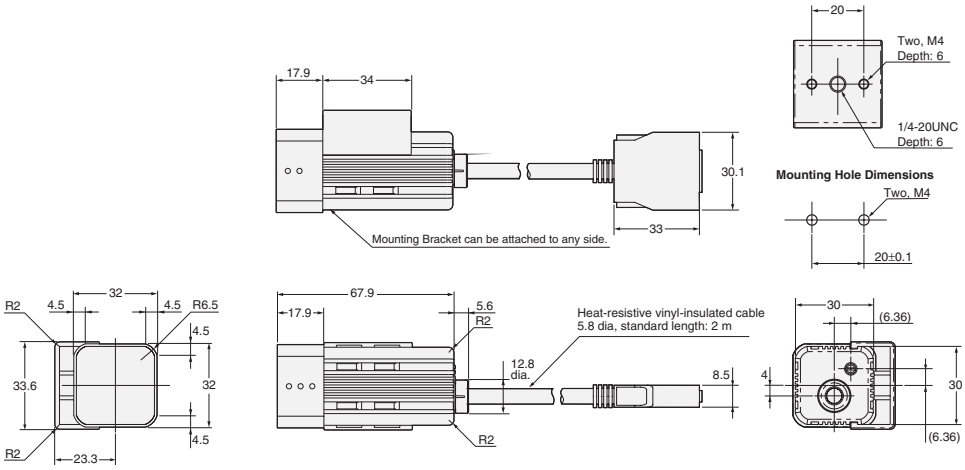

Amplifier Units

ZFV-A□

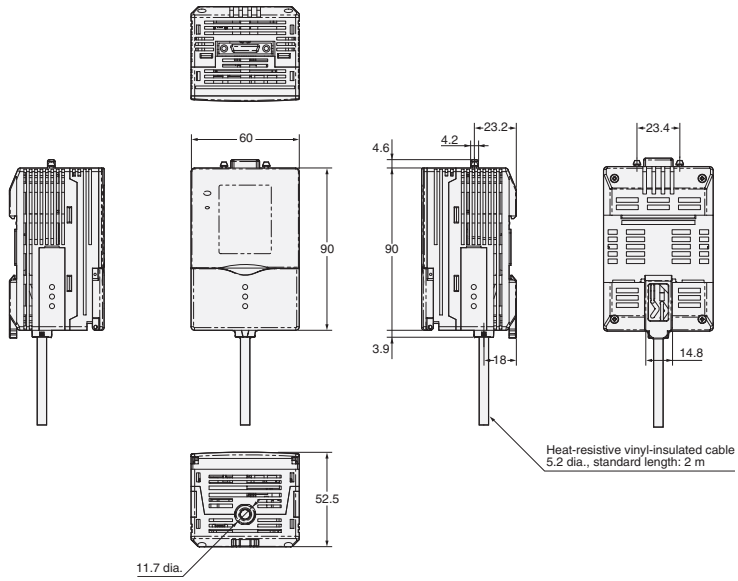

About the I/O cable

The following shows the leads that comprise the I/O cable.

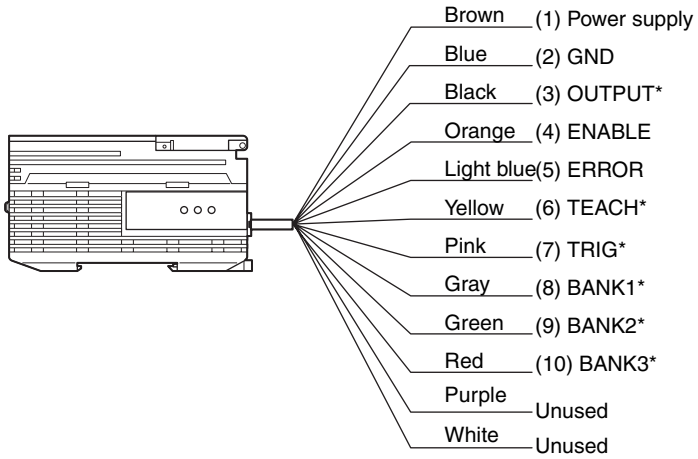

* : Enabled only in the RUN mode

1. Power supply
   This connects the power supply.
   Supply power from a DC power supply unit that has a countermeasure (safety ultra-low voltage circuit) built-in for preventing high voltages from occurring.
   Wire the power supply separately from other devices. Wiring them together or placing them in the same duct may cause induction, resulting in malfunction or damage.
2. GND
3. OUTPUT (control output)
   This outputs judgment results.
   This lead is interlocked with OUTPUT LED.
4. ENABLE (enable output)
5. ERROR (error output)
   This turns ON when an error is generated.
6. TEACH (teaching input)
   There are two teaching modes, workpiece stop teaching and workpiece move teaching. These teaching modes can be selected in the menu.
7. TRIG (measurement trigger input)
   There are two measurement modes, synchronous measurement and continuous measurement. Which mode of measurement is to be performed in is selected in the menu.
8. BANK1 (bank switching input 1)
9. BANK2 (bank switching input 2)
10. BANK3 (bank switching input 3)

I/O Circuit Diagrams

NPN output type (ZFV-A10/A20)

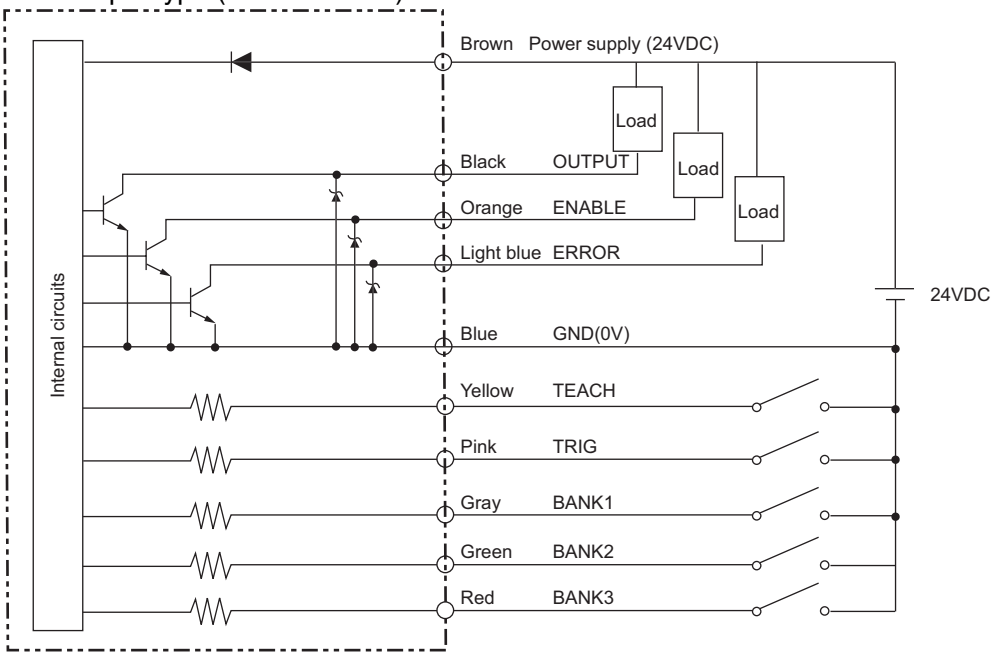

PNP output type (ZFV-A15/A25)

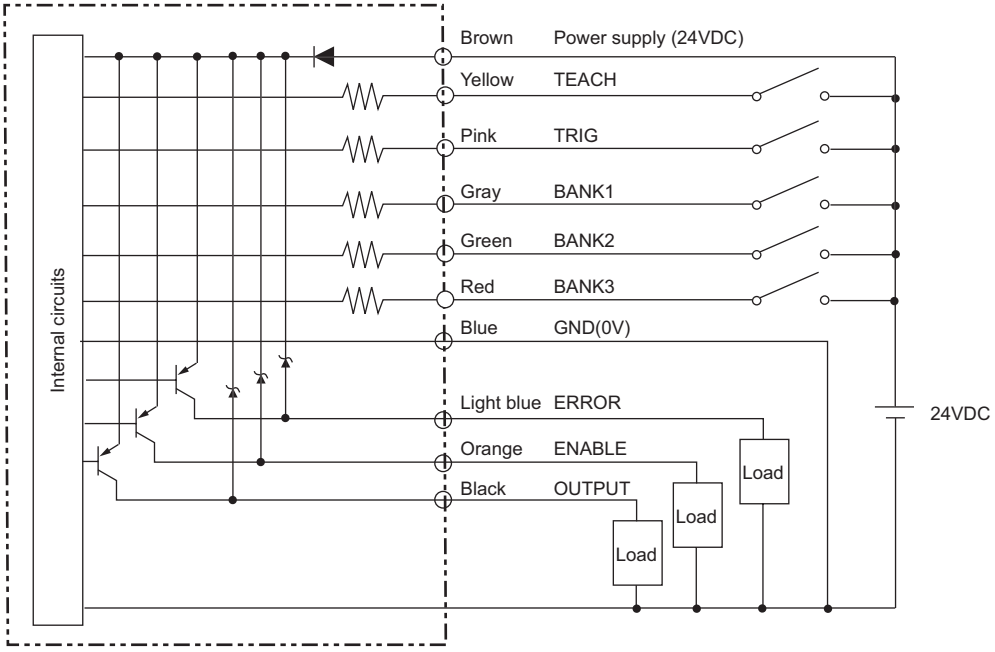

Timing charts

The following shows the timing charts when communication is performed with external devices.

Measurement

Continuous measurement

Measurement is performed continuously for the duration that the TRIG signal is ON.
The measurement result is updated, and output to external devices at each measurement cycle.

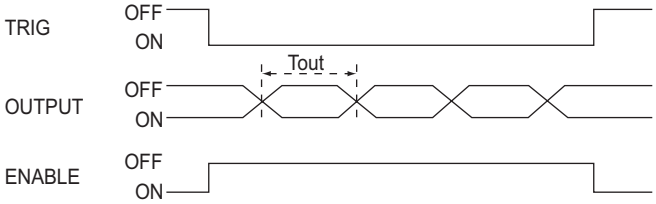

Tout: Measurement cycle
The measurement cycle changes depending on the setting.

Synchronous measurement

Measurement is performed only once in synchronous with the change in TRIG signal state from OFF to ON, and the result is output.

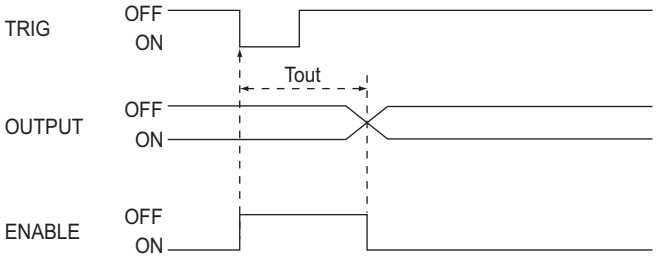

Tout: Measurement time.
The measurement time changes depending on the setting.

- The minimum ON width of the TRIG signal is 1 ms.
- The OUTPUT signal is held until the next measurement result is updated.
  Note, however, that when one-shot output is currently set, the OUTPUT signal is held for the preset time.

Teaching

Workpiece stop teaching

Teaching processing is performed according to TRIG signal input after the TEACH signal is input from the outside.
Measurement is not performed while teaching is being performed. Do not move the workpiece until teaching is completed.

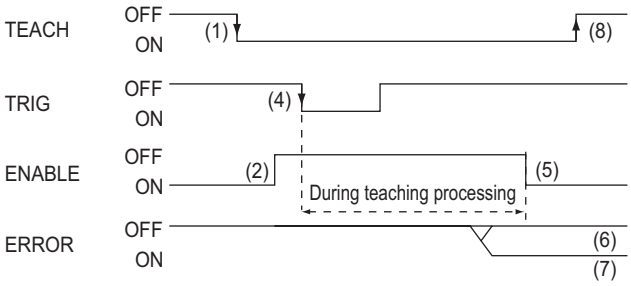

1. Turn the TEACH signal ON.
2. Confirm that the ENABLE signal has turned OFF.
3. Make sure that the workpiece to be taught is in the teaching area.
4. Input the TRIG signal from the outside.
5. The ENABLE signal turns ON after teaching is completed. At this timing, check the state of the ERROR signal.
6. When teaching has been completed successfully, the ERROR signal stays OFF.
7. When teaching fails, the ERROR signal turns ON.
8. Turn the TEACH signal OFF, and end teaching processing.
   When teaching fails, the state before teaching was initiated is returned to. Perform teaching again.
   If the TEACH signal is turned OFF midway, teaching is disabled.

Workpiece move teaching

Use this teaching mode when the object cannot be stopped.
Teaching processing is divided up and performed in synchronous with the TRIG signal input after the TEACH signal is input from the outside.
Teaching must be processed six times.
Measurement is not performed while teaching is being performed.

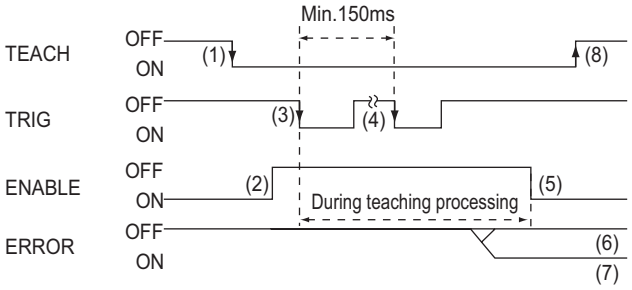

1. Turn the TEACH signal ON from the outside.
2. Confirm that the ENABLE signal has turned OFF.
3. Input the TRIG signal at the timing for measuring the workpiece to be taught.
4. Repeat the input in step (3) six times. (Trigger inputs from the seventh time onwards are ignored.)
5. The ENABLE signal turns ON after teaching is completed. Check the state of the ERROR signal at this timing.
6. When teaching has been completed successfully, the ERROR signal stays OFF.
7. When teaching fails, the ERROR signal turns ON.
8. Turn the TEACH signal OFF, and end teaching processing.
   When teaching fails, the state before teaching was initiated is returned to. Perform teaching again.
   If the TEACH signal is turned OFF midway, teaching is disabled.

Bank switching

The bank No. can be switched when BANK1o BANK3 are connected as follows.

Bank No.	BANK1	BANK2	BANK3
BANK1	OFF	OFF	OFF
BANK2	ON	OFF	OFF
BANK3	OFF	ON	OFF
BANK4	ON	ON	OFF
BANK5	OFF	OFF	ON
BANK6	ON	OFF	ON
BANK7	OFF	ON	ON
BANK8	ON	ON	ON

Cat. No. Z205-E2-02A-X **In the interest of product improvement, specifications are subject to change without notice.**

OMRON EUROPE B.V.
Wegalaan 67-69,
NL-2132 JD, Hoofddorp,
The Netherlands
Phone: +31 23 568 13 00
Fax: +31 23 568 13 88
www.eu.omron.com