Electric Drives and Controls | Hydraulics | Linear Motion and Assembly Technologies | Pneumatics | Service

Rexroth
Bosch Group

Rexroth IndraDyn S
MSK Synchronous Motors

R911296289
Edition 10

Project Planning Manual



Title

Rexroth IndraDyn S
MSK Synchronous Motors

Type of Documentation

Project Planning Manual

Document Typecode

DOK-MOTOR*-MSK********-PR10-EN-P

Internal File Reference

RS-e376b79b0a6846ac00f6d325fdbe2ed7-8-en-US-15

Purpose of Documentation

This documentation…

- explains the features of the product, possibilities for use, operating conditions and operational limits of MSK motors.
- contains technical data regarding available MSK motors.
- provides information regarding product selection, handling and operation

Record of Revision

Edition	Release Date	Notes
DOK-MOTOR*-MSK********-PR01-EN-P	06/2004	First edition
DOK-MOTOR*-MSK********-PR02-EN-P	10/2004	Revision / supplement
DOK-MOTOR*-MSK********-PR04-EN-P	06/2005	Revision / supplement
DOK-MOTOR*-MSK********-PR06-EN-P	12/2006	Revision / supplement fan units
DOK-MOTOR*-MSK********-PR07-EN-P	06/2008	Revision / supplement
DOK-MOTOR*-MSK********-PR08-EN-P	09/2008	Revision / supplement
DOK-MOTOR*-MSK********-PR09-EN-P	12/2010	Revision / supplement
DOK-MOTOR*-MSK********-PR10-EN-P	10/2013	Revision / supplement

Copyright

© Bosch Rexroth AG 2013

This document, as well as the data, specifications and other information set forth in it, are the exclusive property of Bosch Rexroth AG. It may not be reproduced or given to third parties without its consent.

Liability

The specified data is intended for product description purposes only and shall not be deemed to be a guaranteed characteristic unless expressly stipulated in the contract. All rights are reserved with respect to the content of this documentation and the availability of the product.

Table of Contents

Page

1 Introduction 7

2 Important Instructions on Use 9
2.1 Intended Use 9
2.1.1 Introduction 9
2.1.2 Areas of Use and Application 9
2.2 Inappropriate Use 10

3 Safety Notes for Electric Drives and Controls 11
3.1 Term Definition 11
3.2 General information 12
3.2.1 Using the Safety instructions and passing them on to others 12
3.2.2 Requirements for safe use 12
3.2.3 Hazards by improper use 13
3.3 Danger-Related Notes 14
3.3.1 Protection against Touch of Electric Parts and Housings 14
3.3.2 Protective extra-low voltage as protection against electric shock 15
3.3.3 Protection against dangerous movements 15
3.3.4 Protection Against Magnetic and Electromagnetic Fields During Operation and Mounting 17
3.3.5 Protection against contact with hot parts 17
3.3.6 Protection during handling and mounting 17
3.3.7 Battery safety 18
3.3.8 Protection Against Pressurized Systems 18
3.4 Explanation of signal words and the Safety alert symbol 19

4 Technical Data 21
4.1 Description of the Parameters Specified 21
4.2 Technical Data Holding Brakes 24
4.3 Technical Data Encoder MSK Motors 26
4.4 MSK030 27
4.4.1 MSK030B - Technical Data 27
4.4.2 MSK030C - Technical Data 29
4.5 MSK040 30
4.5.1 MSK040B - Technical Data 30
4.5.2 MSK040C - Technical Data 32
4.6 MSK043 34
4.6.1 MSK043C - Technical Data 34
4.7 MSK050 36
4.7.1 MSK050B - Technical Data 36
4.7.2 MSK050C - Technical Data 39
4.8 MSK060 41
4.8.1 MSK060B - Technical Data 41
4.8.2 MSK060C - Technical Data 43

Table of Contents

Page

4.9 MSK061 ... 45
4.9.1 MSK061B - Technical Data ... 45
4.9.2 MSK061C - Technical Data ... 47
4.10 MSK070 ... 50
4.10.1 MSK070C - Technical Data ... 50
4.10.2 MSK070D - Technical Data ... 53
4.10.3 MSK070E - Technical Data ... 56
4.11 MSK071 ... 59
4.11.1 MSK071C - Technical Data ... 59
4.11.2 MSK071D - Technical Data ... 62
4.11.3 MSK071E - Technical Data ... 65
4.12 MSK075 ... 68
4.12.1 MSK075C Technical Data ... 68
4.12.2 MSK075D Technical Data ... 71
4.12.3 MSK075E Technical Data ... 74
4.13 MSK076 ... 77
4.13.1 MSK076C - Technical Data ... 77
4.14 MSK100 ... 79
4.14.1 MSK100A - Technical Data ... 79
4.14.2 MSK100B - Technical Data ... 82
4.14.3 MSK100C - Technical Data ... 85
4.14.4 MSK100D - Technical Data ... 88
4.15 MSK101 ... 91
4.15.1 MSK101C - Technical Data ... 91
4.15.2 MSK101D - Technical Data ... 94
4.15.3 MSK101E - Technical Data ... 97
4.16 MSK103 ... 100
4.16.1 MSK103A - Technical Data ... 100
4.16.2 MSK103B - Technical Data ... 102
4.16.3 MSK103D - Technical Data ... 103
4.17 MSK131 ... 104
4.17.1 MSK131B - Technical Data ... 104
4.17.2 MSK131D - Technical Data ... 106
4.18 MSK133 ... 108
4.18.1 MSK133B Technical Data ... 108
4.18.2 MSK133C Technical Data ... 111
4.18.3 MSK133D Technical Data ... 114
4.18.4 MSK133E Technical Data ... 117
4.18.5 MSK133 Technical Data Fan ... 120

5 Specifications ... 121
5.1 Technical Design ... 121
5.2 MSK030 Specifications ... 122
5.3 MSK040 Specifications ... 123
5.4 MSK043 Specifications ... 124
5.5 MSK050 Specifications ... 125

Table of Contents

Page

5.6 MSK060 Specifications ... 126
5.7 MSK060 Specifications Fan Unit Axial ... 127
5.8 MSK060 Specifications Fan Unit Radial ... 128
5.9 MSK061 Specifications ... 129
5.10 MSK061 Specifications Fan Unit Axial ... 130
5.11 MSK061 Specifications Fan Unit Radial ... 131
5.12 MSK070 Specifications ... 132
5.13 MSK070 Specifications Fan Unit Axial ... 133
5.14 MSK070 Specifications Fan Unit Radial ... 134
5.15 MSK071 Specifications ... 135
5.16 MSK071 Specifications Liquid Cooling ... 136
5.17 MSK071 Specifications Fan Unit Axial ... 137
5.18 MSK071 Specifications Fan Unit Radial ... 138
5.19 MSK075 Specifications ... 139
5.20 MSK075 Specifications Liquid Cooling ... 140
5.21 MSK075 Specifications Fan Unit Axial ... 141
5.22 MSK075 Specifications Fan Unit Radial ... 142
5.23 MSK076 Specifications ... 143
5.24 MSK076 Specifications Fan Unit Axial ... 144
5.25 MSK076 Specifications Fan Unit Radial ... 145
5.26 MSK100 Specifications ... 146
5.27 MSK100 Specifications Fan Unit Axial ... 147
5.28 MSK100 Specifications Fan Unit Radial ... 148
5.29 MSK101 Specifications ... 149
5.30 MSK101 Specifications Liquid Cooling ... 150
5.31 MSK101 Specifications Fan Unit Axial ... 151
5.32 MSK101 Specifications Fan Unit Radial ... 152
5.33 MSK103 Specifications ... 153
5.34 MSK131 Specifications ... 154
5.35 MSK131 Specifications Fan Unit Axial ... 155
5.36 MSK133 Specifications ... 156
5.37 MSK133 Specifications Liquid Cooling ... 157

6 Type Code ... 159
6.1 MSK Type Code - Structure and Description ... 159
6.2 MSK030 Type Code ... 161
6.3 MSK040 Type Code ... 162
6.4 MSK043 Type Code ... 163
6.5 MSK050 Type Code ... 164
6.6 MSK060 Type Code ... 165
6.7 MSK061 Type Code ... 166
6.8 MSK070 Type Code ... 167
6.9 MSK071 Type Code ... 168
6.10 MSK075 Type Code ... 169
6.11 MSK076 Type Code ... 170
6.12 MSK100 Type Code ... 171

Table of Contents

Page

6.13 MSK101 Type Code ... 173
6.14 MSK103 Type Code ... 175
6.15 MSK131 Type Code ... 176
6.16 MSK133 Type Code ... 177

7 Accessories ... 179
7.1 Fan Units for MSK Motors ... 179
7.1.1 Fields of Application Fan Units ... 179
7.1.2 Type Code for Fan Units ... 180
7.1.3 Technical Data of Fan Units ... 181
7.1.4 Selection Table for Fan Units ... 183
7.1.5 Fan Units Electrical Connection ... 185
7.1.6 Ordering Fan Units ... 187
7.1.7 Assembly Fan Units ... 188
7.2 Gearboxes ... 192
7.3 Sealing Air Connection ... 193
7.3.1 Description ... 193
7.3.2 Technical Data ... 193
7.3.3 Ording Designations and Assignment ... 193
7.3.4 Mounting Instruction ... 194

8 Connection Technique ... 197
8.1 Electric Connection Technique Overview ... 197
8.2 Power Connector ... 198
8.3 Encoder Connector ... 201
8.4 Connector, Rotatable ... 202
8.5 Terminal Box RLK1200 ... 204
8.6 Terminal Box RLK1300 ... 205
8.7 Connecting Cables ... 206
8.7.1 Ready-Made Connection Cables ... 206
8.8 Connection Technique Fan Units ... 206
8.9 Coolant Connection Liquid Cooling ... 207

9 Operating Conditions and Application Notes ... 209
9.1 Ambient Conditions ... 209
9.1.1 Setup Elevation and Ambient Temperature ... 209
9.1.2 Humidity / Temperature ... 209
9.1.3 Vibration ... 210
9.1.4 Shock ... 211
9.2 Degree of Protection ... 212
9.3 Design and Installation Positions ... 212
9.4 Compatibility with Foreign Materials ... 213
9.5 Motor Paint ... 214
9.6 Output Shaft ... 214
9.6.1 Plain Shaft ... 214

Table of Contents

Page

9.6.2 Output Shaft with Keyway ... 214
9.6.3 Output Shaft with Shaft Sealing Ring ... 215
9.7 Bearing and Shaft Load ... 216
9.7.1 Radial Load, Axial Load ... 216
9.8 Bearing Lifetime ... 221
9.9 Attachment of Drive Elements ... 222
9.10 Holding Brakes ... 223
9.10.1 Holding Brake Electrically-Released ... 223
9.10.2 Holding Brakes - Notes Regarding Safety ... 224
9.10.3 Layout of Holding Brakes ... 225
9.10.4 Holding Brake – Commissioning and Maintenance Instructions ... 225
9.11 Acceptances and Approvals ... 227
9.11.1 CE Symbol ... 227
9.11.2 cURus-Sign ... 227
9.12 Motor Cooling ... 228
9.12.1 Natural Convection ... 228
9.12.2 Fan Units ... 228
9.12.3 Liquid Cooling ... 229
9.13 Motor Temperature Monitoring ... 234
9.13.1 General Information ... 234
9.13.2 Temperature Sensor ... 234
9.14 Operation on External Controllers ... 234

10 Transport and Storage ... 237
10.1 Transport Instructions ... 237
10.2 Storage Instructions ... 239
10.2.1 Storage Conditions ... 239
10.2.2 Storage Times ... 240

11 Delivery Status, Identification, Handling ... 241
11.1 State of Delivery ... 241
11.1.1 General Information ... 241
11.1.2 Inspection at the Factory ... 241
11.1.3 Test Realized by the Customer ... 241
11.2 Identification ... 242
11.2.1 Scope of Delivery ... 242
11.2.2 Rating Plate ... 242
11.3 Handling ... 244

12 Installation ... 247
12.1 Safety ... 247
12.2 Skilled Personnel ... 248
12.3 Mechanical Attachment ... 249
12.3.1 Flange Assembly ... 249
12.3.2 Foot Attachment ... 249

Table of Contents

Page

12.3.3 Preparation ... 250
12.3.4 Assembling the Motor ... 250
12.4 Electrical Connection – Motor Assembly ... 252
12.4.1 General Information ... 252
12.4.2 Attaching the Connectors ... 252
12.4.3 Adjusting the Output Direction ... 254
12.5 MSK133 with Terminal Box Type RLK1200, RLK1300 ... 254

13 Commissioning, Operation and Maintenance ... 259
13.1 Commissioning ... 259
13.2 Operation ... 260
13.3 Deactivation ... 260
13.4 Maintenance ... 261
13.4.1 General Information ... 261
13.4.2 Cleaning ... 261
13.4.3 Bearings ... 262
13.4.4 Connecting Cables ... 262
13.5 Notice at Malfunctions ... 263
13.6 Dismantling ... 264

14 Environmental protection and disposal ... 265
14.1 Environmental protection ... 265
14.2 Disposal ... 265

15 Appendix ... 267
15.1 List of Standards ... 267
15.2 Declaration of Conformity ... 268

16 Service and support ... 271

Index ... 273

1 Introduction

IndraDyn S - MSK servomotors for all specifications

The motors of the MSK series are characterized by a wide performance spectrum and fine frame size graduations. The high torque density of these synchronous servo motors allow for an especially compact construction with a maximum torque up to 631 Nm.

Depending from the required exactness, you are able to choose between encoder systems with low, average or high resolution. All encoder variants are available in single or multiturn design.

MSK motors can be set up with further numerous options and be customized. Therewith, the MSK series can be used for applications beyond classically areas of application for servo motors.

The wide power spectrum of the MSK motor series is complemented by a wide range of functional options.

Beside different encoder systems, a lot of other options like keyway, holding brake and increased concentricity can be choosed. Fan units for axial and radial mounting are available for applications with increased continuous output.

Such as MSK motors are standardly designed in protection class IP65 and have an integrated temperature sensor, even the fan motors are. This does not only improve the reliability of the motors. The certified intrinsic safety of the fans ("Thermally Protected F" acc. to UL) saves an external motor protection switch. Highest power requirements are covered via liquid cooling which is selectable for the required frame size.

Document Structure

This documentation contains:

Chapter	Title	Content
1	Introduction	**General Information**
2	Important Instructions on Use	**Safety**
3	Safety Instructions	
4	Technical Data	**Product Description** (for planners and designers)
5	Specifications	
6	Type Code	
7	Fan Units for MSK Motors	
8	Connection Technique	
9	Operating Conditions and Application Notes	
10	Transport and Storage	**Practice** (for operating and maintenance personnel)
11	Delivery Status, Identification, Handling	
12	Installation	
13	Commissioning, Operation and Maintenance	
14	Environmental Protection and Disposal	**General Information**
15	Appendix	
16	Service & Support	
	Index	

Tab. 1-1: Document Structure

Additional Documentation

As the case may be, you might need additional documentation referring to the used devices to project the drive systems of the MSK motor unit. Rexroth provides all product documentations in the Bosch Rexroth media directory in PDF format.

Introduction

http://www.boschrexroth.com/various/utilities/mediadirectory/index.jsp

Standards

This documentation refers to German, European and international technical standards. Documents and sheets on standards are subject to copyright protection and may not be passed on to third parties by Rexroth. If need be, please contact the authorized sales outlets or, in Germany, directly:

BEUTH Verlag GmbH

Burggrafenstrasse 6

10787 Berlin, Germany

Phone +49-(0)30-26 01-22 60, Fax +49-(0)30-26 01-12 60

Internet: http://www.din.de/beuth

Email: postmaster@beuth.de

Foreign Systems

Documentation for external systems which are connected to Rexroth components are not included in the scope of delivery and must be ordered directly from the respective manufacturers.

Feedback

Your experiences are an essential part of the process of improving both the product and the documentation.

Please send your remarks to dokusupport@boschrexroth.de.

2 Important Instructions on Use

2.1 Intended Use

2.1.1 Introduction

Rexroth products are developed and manufactured according to the state of the art. Before they are delivered, they are inspected to ensure that they operate safely.

⚠ WARNING **Personal injury and property damage coused by inappropriate use of the products!**

The products must only be used as intended. If they are not used as intended, situations may arise that result in personal injuries or damage to property.

☞ Rexroth, as the manufacturer, does not provide any warranty, assume any liability, or pay any damages for damage caused by products not being used as intended. Any risks resulting from the products not being used as intended are the sole responsibility of the user.

Before using Rexroth products, the following condition precedent must be fulfilled so as to ensure that they are used as intended:

- Everyone who in any way whatsoever handles one of our products must read and understand the corresponding notes regarding safety and regarding the intended use.
- If the products are hardware, they must be kept in their original state, i.e. no constructional modifications must be made. Software products must not be decompiled; their source codes must not be modified.
- Damaged or improperly working products must not be installed or put into operation.
- It must be ensured that the products are installed according to the regulations specified in the documentation.

2.1.2 Areas of Use and Application

MSK motors are designed to be used as rotary main and servo drive motors. The following are typical fields of application:

- Machine tools
- Printing and paper-processing machines,
- Packaging and Food-processing machines,
- Metal-forming machines
- Robotics

Device types with different driving powers and different interfaces are available for an application-specific use of the motors.

Controlling and monitoring of the motors may require connection of additional sensors and actuators.

☞ The motors must only be used with the accessories specified in this documentation. Components that are not explicitly mentioned must neither be attached nor connected. The same is true for cables and lines.

The operation must only be carried out in the explicitly mentioned configurations and combinations of the component and with the software and firmware specified in the corresponding functional description.

Any connected drive control device must be programmed before startup in order to ensure that the motor executes the functions specifically to the particular application.

The motors may only be operated under the assembly, mounting and installation conditions, in the normal position, and under the environmental conditions (temperature, degree of protection, humidity, EMC etc.) specified in this documentation.

2.2 Inappropriate Use

Any use of motors outside of the fields of application mentioned above or under operating conditions and technical data other than those specified in this documentation is considered as "non-intended use".

MSK motors may not be used if . . .

- they are subject to operating conditions which do not comply with the ambient conditions described above. For example, they must not be operated under water, under extreme temperature fluctuations or extreme maximum temperatures.
- the intended application is not explicitly released by Bosch Rexroth. Please make absolutely sure that the instructions given in the general safety notes are also complied with!

3 Safety Notes for Electric Drives and Controls

3.1 Term Definition

System An installation consists of several devices or systems interconnected for a defined purpose and on a defined site which, however, are not intended to be placed on the market as a single functional unit.

Electrical drive system An electric drive system comprises all components from mains supply to motor shaft; this includes, for example, electric motor(s), motor encoder(s), supply units and drive controllers, as well as auxiliary and additional components, such as mains filter, mains choke and the corresponding lines and cables.

User A user is a person installing, commissioning or using a product which has been placed on the market.

Application documentation Application documentation comprises the entire documentation used to inform the user of the product about the use and safety-relevant features for configuring, integrating, installing, mounting, commissioning, operating, maintaining, repairing and decommissioning the product. The following terms are also used for this kind of documentation: Operating Instructions, Commissioning Manual, Instruction Manual, Project Planning Manual, Application Description, etc.

Electrical apparatus Electrical equipment encompasses all devices used to generate, convert, transmit, distribute or apply electrical energy, such as electric motors, transformers, switching devices, cables, lines, power-consuming devices, circuit board assemblies, plug-in units, control cabinets, etc.

Device A device is a finished product with a defined function, intended for users and placed on the market as an individual piece of merchandise.

Manufacturer The manufacturer is an individual or legal entity bearing responsibility for the design and manufacture of a product which is placed on the market in the individual's or legal entity's name. The manufacturer can use finished products, finished parts or finished elements, or contract out work to subcontractors. However, the manufacturer must always have overall control and possess the required authority to take responsibility for the product.

Component A component is a combination of elements with a specified function, which are part of a piece of equipment, device or system. Components of the electric drive and control system are, for example, supply units, drive controllers, mains choke, mains filter, motors, cables, etc.

Machine A machine is the entirety of interconnected parts or units at least one of which is movable. Thus, a machine consists of the appropriate machine drive elements, as well as control and power circuits, which have been assembled for a specific application. A machine is, for example, intended for processing, treatment, movement or packaging of a material. The term "machine" also covers a combination of machines which are arranged and controlled in such a way that they function as a unified whole.

Product Examples of a product: Device, component, part, system, software, firmware, among other things.

Project planning manual A project planning manual is part of the application documentation used to support the sizing and planning of systems, machines or installations.

Qualified personell In terms of this application documentation, qualified persons are those persons who are familiar with the installation, mounting, commissioning and operation of the components of the electric drive and control system, as well as with the hazards this implies, and who possess the qualifications their work

requires. To comply with these qualifications, it is necessary, among other things,

1) to be trained, instructed or authorized to switch electric circuits and devices safely on and off, to ground them and to mark them

2) to be trained or instructed to maintain and use adequate safety equipment

3) to attend a course of instruction in first aid

Control system A control system comprises several interconnected control components placed on the market as a single functional unit.

3.2 General information

3.2.1 Using the Safety instructions and passing them on to others

Do not attempt to install and operate the components of the electric drive and control system without first reading all documentation provided with the product. Read and understand these safety instructions and all user documentation prior to working with these components. If you do not have the user documentation for the components, contact your responsible Rexroth sales partner. Ask for these documents to be sent immediately to the person or persons responsible for the safe operation of the components.

If the component is resold, rented and/or passed on to others in any other form, these safety instructions must be delivered with the component in the official language of the user's country.

Improper use of these components, failure to follow the safety instructions in this document or tampering with the product, including disabling of safety devices, could result in property damage, injury, electric shock or even death.

3.2.2 Requirements for safe use

Read the following instructions before initial commissioning of the components of the electric drive and control system in order to eliminate the risk of injury and/or property damage. You must follow these safety instructions.

- Rexroth is not liable for damages resulting from failure to observe the safety instructions.
- Read the operating, maintenance and safety instructions in your language before commissioning. If you find that you cannot completely understand the application documentation in the available language, please ask your supplier to clarify.
- Proper and correct transport, storage, mounting and installation, as well as care in operation and maintenance, are prerequisites for optimal and safe operation of the component.
- Only qualified persons may work with components of the electric drive and control system or within its proximity.
- Only use accessories and spare parts approved by Rexroth.
- Follow the safety regulations and requirements of the country in which the components of the electric drive and control system are operated.
- Only use the components of the electric drive and control system in the manner that is defined as appropriate. See chapter "Appropriate Use".
- The ambient and operating conditions given in the available application documentation must be observed.
- Applications for functional safety are only allowed if clearly and explicitly specified in the application documentation "Integrated Safety Technolo-

gy". If this is not the case, they are excluded. Functional safety is a safety concept in which measures of risk reduction for personal safety depend on electrical, electronic or programmable control systems.

- The information given in the application documentation with regard to the use of the delivered components contains only examples of applications and suggestions.

  The machine and installation manufacturers must

  – make sure that the delivered components are suited for their individual application and check the information given in this application documentation with regard to the use of the components,

  – make sure that their individual application complies with the applicable safety regulations and standards and carry out the required measures, modifications and complements.

- Commissioning of the delivered components is only allowed once it is sure that the machine or installation in which the components are installed complies with the national regulations, safety specifications and standards of the application.
- Operation is only allowed if the national EMC regulations for the application are met.
- The instructions for installation in accordance with EMC requirements can be found in the section on EMC in the respective application documentation.

  The machine or installation manufacturer is responsible for compliance with the limit values as prescribed in the national regulations.
- The technical data, connection and installation conditions of the components are specified in the respective application documentations and must be followed at all times.

National regulations which the user has to comply with

- European countries: In accordance with European EN standards
- United States of America (USA):
  – National Electrical Code (NEC)
  – National Electrical Manufacturers Association (NEMA), as well as local engineering regulations
  – Regulations of the National Fire Protection Association (NFPA)
- Canada: Canadian Standards Association (CSA)
- Other countries:
  – International Organization for Standardization (ISO)
  – International Electrotechnical Commission (IEC)

3.2.3 Hazards by improper use

- High electrical voltage and high working current! Danger to life or serious injury by electric shock!
- High electrical voltage by incorrect connection! Danger to life or injury by electric shock!
- Dangerous movements! Danger to life, serious injury or property damage by unintended motor movements!
- Health hazard for persons with heart pacemakers, metal implants and hearing aids in proximity to electric drive systems!

- Risk of burns by hot housing surfaces!
- Risk of injury by improper handling! Injury by crushing, shearing, cutting, hitting!
- Risk of injury by improper handling of batteries!
- Risk of injury by improper handling of pressurized lines!

3.3 Danger-Related Notes

3.3.1 Protection against Touch of Electric Parts and Housings

☞ This section concerns components of electric drive and control systems with a voltage **over 50 volt.**

In the case of touching parts with a voltage higher than 50 volt, this can be dangerous for personnell and can lead to electric shock. During operation of components of electric drive and control systems, certain parts of these components are inevitably under dangerous voltage.

High electrical voltage! Danger of life, risk of injury due to electric shock or heavy bodily harm.

- Operation, maintenance and/or repair of components of electric drive and control systems may only be done by qualified personnel.
- Observe the general construction and safety instructions about work on high voltage systems.
- Before switching on, establish the fixed connection of the protective conductor to all electric components according to the interconnection diagram.
- Operation, even for short-term measuring and testing purposes, is only permitted with the protective conductor securely connected to the component points provided.
- Disconnect electric components from the mains or from the power supply, before you have contact with electric parts with a voltage higher than 50 V. Secure the electric components against restarting.
- Observe for electrical components:

  Please, always wait **30 minutes**, after switch-off, so live capacitors discharge before they have access to electric components. To exclude any danger due to any contact, measure electric voltage of live parts before working.
- Before switch-on install the provided covers and protective devices for the touch guard.
- Do not touch any electric junctions of live components.
- Do not disconnect or connect connectors under voltage.

High housing voltage and high discharge current! Danger! Risk of injury due to electric shock!

- Before switch-on and start-up, ground or connect the components of the drive and control system with the protective conductors on the grounding points.

- Connect the protective conductors of the electric drive and control systems always fix and continuously with the external supply network.
- Do a protective conductor connection with a minimum cross section according to the following table.

Cross-sectional area A of the live wires	Minimum cross-sectional area A_{PE} of the protective conductor
A ≤ 16 mm²	A
25 mm² < A ≤ 50 mm²	25 mm²
50 mm² < A	A / 2

Tab. 3-1: Minimum cross-section of protective conductor connection for motors

3.3.2 Protective extra-low voltage as protection against electric shock

Protective extra-low voltage is used to allow connecting devices with basic insulation to extra-low voltage circuits.

On components of an electric drive and control system provided by Rexroth, all connections and terminals with voltages up to 50 volts are PELV ("Protective Extra-Low Voltage") systems. It is allowed to connect devices equipped with basic insulation (such as programming devices, PCs, notebooks, display units) to these connections.

Danger to life, risk of injury by electric shock! High electrical voltage by incorrect connection!

If extra-low voltage circuits of devices containing voltages and circuits of more than 50 volts (e.g., the mains connection) are connected to Rexroth products, the connected extra-low voltage circuits must comply with the requirements for PELV ("Protective Extra-Low Voltage").

3.3.3 Protection against dangerous movements

Dangerous movements can be caused by faulty control of connected motors. Some common examples are:

- Improper or wrong wiring or cable connection
- Operator errors
- Wrong input of parameters before commissioning
- Malfunction of sensors and encoders
- Defective components
- Software or firmware errors

These errors can occur immediately after equipment is switched on or even after an unspecified time of trouble-free operation.

The monitoring functions in the components of the electric drive and control system will normally be sufficient to avoid malfunction in the connected drives. Regarding personal safety, especially the danger of injury and/or property damage, this alone cannot be relied upon to ensure complete safety. Until the integrated monitoring functions become effective, it must be assumed in any case that faulty drive movements will occur. The extent of faulty drive movements depends upon the type of control and the state of operation.

Dangerous movements! Danger to life, risk of injury, serious injury or property damage!

A **risk assessment** must be prepared for the installation or machine, with its specific conditions, in which the components of the electric drive and control system are installed.

As a result of the risk assessment, the user must provide for monitoring functions and higher-level measures on the installation side for personal safety. The safety regulations applicable to the installation or machine must be taken into consideration. Unintended machine movements or other malfunctions are possible if safety devices are disabled, bypassed or not activated.

To avoid accidents, injury and/or property damage:

- Keep free and clear of the machine's range of motion and moving machine parts. Prevent personnel from accidentally entering the machine's range of motion by using, for example:
  - Safety fences
  - Safety guards
  - Protective coverings
  - Light barriers
- Make sure the safety fences and protective coverings are strong enough to resist maximum possible kinetic energy.
- Mount emergency stopping switches in the immediate reach of the operator. Before commissioning, verify that the emergency stopping equipment works. Do not operate the machine if the emergency stopping switch is not working.
- Prevent unintended start-up. Isolate the drive power connection by means of OFF switches/OFF buttons or use a safe starting lockout.
- Make sure that the drives are brought to safe standstill before accessing or entering the danger zone.
- Additionally secure vertical axes against falling or dropping after switching off the motor power by, for example,
  - mechanically securing the vertical axes,
  - adding an external braking/arrester/clamping mechanism or
  - ensuring sufficient counterbalancing of the vertical axes.
- The standard equipment **motor holding brake** or an external holding brake controlled by the drive controller is **not sufficient to guarantee personal safety**!
- Disconnect electrical power to the components of the electric drive and control system using the master switch and secure them from reconnection ("lock out") for:
  - Maintenance and repair work
  - Cleaning of equipment
  - Long periods of discontinued equipment use
- Prevent the operation of high-frequency, remote control and radio equipment near components of the electric drive and control system and their supply leads. If the use of these devices cannot be avoided, check the machine or installation, at initial commissioning of the electric drive and control system, for possible malfunctions when operating such high-frequency, remote control and radio equipment in its possible positions of normal use. It might possibly be necessary to perform a special electromagnetic compatibility (EMC) test.

3.3.4 Protection Against Magnetic and Electromagnetic Fields During Operation and Mounting

Magnetic and electromagnetic fields generated by current-carrying conductors or permanent magnets of electric motors represent a serious danger to persons with heart pacemakers, metal implants and hearing aids.

Health hazard for persons with heart pacemakers, metal implants and hearing aids in proximity to electric components!

- Persons with heart pacemakers and metal implants are not allowed to enter the following areas:
  - Areas in which components of the electric drive and control systems are mounted, commissioned and operated.
  - Areas in which parts of motors with permanent magnets are stored, repaired or mounted.
- If it is necessary for somebody with a heart pacemaker to enter such an area, a doctor must be consulted prior to doing so. The noise immunity of implanted heart pacemakers differs so greatly that no general rules can be given.
- Those with metal implants or metal pieces, as well as with hearing aids, must consult a doctor before they enter the areas described above.

3.3.5 Protection against contact with hot parts

Hot surfaces of components of the electric drive and control system. Risk of burns!

- Do not touch hot surfaces of, for example, braking resistors, heat sinks, supply units and drive controllers, motors, windings and laminated cores!
- According to the operating conditions, temperatures of the surfaces can be **higher than 60 °C** (140 °F) during or after operation.
- Before touching motors after having switched them off, let them cool down for a sufficient period of time. Cooling down can require **up to 140 minutes**! The time required for cooling down is approximately five times the thermal time constant specified in the technical data.
- After switching chokes, supply units and drive controllers off, wait **15 minutes** to allow them to cool down before touching them.
- Wear safety gloves or do not work at hot surfaces.
- For certain applications, and in accordance with the respective safety regulations, the manufacturer of the machine or installation must take measures to avoid injuries caused by burns in the final application. These measures can be, for example: Warnings at the machine or installation, guards (shieldings or barriers) or safety instructions in the application documentation.

3.3.6 Protection during handling and mounting

Risk of injury by improper handling! Injury by crushing, shearing, cutting, hitting!

- Observe the relevant statutory regulations of accident prevention.
- Use suitable equipment for mounting and transport.

- Avoid jamming and crushing by appropriate measures.
- Always use suitable tools. Use special tools if specified.
- Use lifting equipment and tools in the correct manner.
- Use suitable protective equipment (hard hat, safety goggles, safety shoes, safety gloves, for example).
- Do not stand under hanging loads.
- Immediately clean up any spilled liquids from the floor due to the risk of falling!

3.3.7 Battery safety

Batteries consist of active chemicals in a solid housing. Therefore, improper handling can cause injury or property damage.

Risk of injury by improper handling!

- Do not attempt to reactivate low batteries by heating or other methods (risk of explosion and cauterization).
- Do not attempt to recharge the batteries as this may cause leakage or explosion.
- Do not throw batteries into open flames.
- Do not dismantle batteries.
- When replacing the battery/batteries, do not damage the electrical parts installed in the devices.
- Only use the battery types specified for the product.

☞ Environmental protection and disposal! The batteries contained in the product are considered dangerous goods during land, air, and sea transport (risk of explosion) in the sense of the legal regulations. Dispose of used batteries separately from other waste. Observe the national regulations of your country.

3.3.8 Protection Against Pressurized Systems

According to the information given in the Project Planning Manuals, motors and components cooled with liquids and compressed air can be partially supplied with externally fed, pressurized media, such as compressed air, hydraulics oil, cooling liquids and cooling lubricants. Improper handling of the connected supply systems, supply lines or connections can cause injuries or property damage.

Risk of injury by improper handling of pressurized lines!

- Do not attempt to disconnect, open or cut pressurized lines (risk of explosion).
- Observe the respective manufacturer's operating instructions.
- Before dismounting lines, relieve pressure and empty medium.
- Use suitable protective equipment (safety goggles, safety shoes, safety gloves, for example).
- Immediately clean up any spilled liquids from the floor due to the risk of falling!

☞ Environmental protection and disposal! The agents (e.g., fluids) used to operate the product might not be environmentally friendly. Dispose of agents harmful to the environment separately from other waste. Observe the national regulations of your country.

3.4 Explanation of signal words and the Safety alert symbol

The Safety Instructions in the available application documentation contain specific signal words (DANGER, WARNING, CAUTION or NOTICE) and, where required, a safety alert symbol (in accordance with ANSI Z535.6-2011).

The signal word is meant to draw the reader's attention to the safety instruction and identifies the hazard severity.

The safety alert symbol (a triangle with an exclamation point), which precedes the signal words DANGER, WARNING and CAUTION, is used to alert the reader to personal injury hazards.

⚠ DANGER

In case of non-compliance with this safety instruction, death or serious injury **will** occur.

⚠ WARNING

In case of non-compliance with this safety instruction, death or serious injury **could** occur.

⚠ CAUTION

In case of non-compliance with this safety instruction, minor or moderate injury could occur.

NOTICE

In case of non-compliance with this safety instruction, property damage could occur.

4 Technical Data

4.1 Description of the Parameters Specified

The speed-torque curves and technical data are specified for two different temperature models.

- 60 K temperature increase on the housing and
- 100 K temperature increase on the winding

☞ When selecting the technical data, observe the temperatures specified! The appropriate parameters are marked with **100 K** and **60 K**, respectively.

60K Data 60K data for IndraDyn S motors are specified for the following conditions:

- Ambient temperature 40 °C
- Setup isolated
- Permissible temperature increase on the housing ΔT = 60 K
- In case of motors with the optional holding brake, the data are always specified for motors **with** a holding brake.
- Motors with radial shaft sealing ring

100K Data 100K data for IndraDyn S motors are specified for the following conditions:

- Ambient temperature 40 °C
- Structure **not** insulated (attachment to steel flange, L×W×H = 450×30×350 or 120×40×100)
- Maximum temperature increase on the winding ΔT = 100 K
- In case of motors with the optional holding brake, the data are always specified for motors **with** a holding brake.
- Motors with radial shaft sealing ring

☞ The machine accuracy can be negatively affected by an increased linear expansion during 100 K operation. We recommend using 60 K data for the planning of systems.

Parameters on the Data Sheet

Designation	Symbol	Unit	Description
Continuous torque at standstill, 60K	M_{0_60}	Nm	Continuous torque that can be applied to the motor output shaft at a speed of n ≥ 0.1 Hz.
Continuous current at standstill, 60K	I_{0_60}	A	Phase current (crest value) of the motor M_{0_60} required for the continuous torque at standstill at a speed of n ≥ 0.1 Hz.
Continuous torque at standstill, 100K	M_{0_100}	Nm	Continuous torque that can be applied to the motor output shaft at a speed of n ≥ 0.1 Hz.
Continuous current at standstill, 100K	$I_{0_100(rms)}$	A	Phase current (crest value) of the motor M_{0_100} required for the continuous torque at standstill at a speed of n ≥ 0.1 Hz.
Continuous torque at standstill surface	M_{0_S}	Nm	Continuous torque that can be applied to the motor output shaft at a speed of n ≥ 0.1 Hz.
Continuous current at standstill surface	$I_{0_S(rms)}$	A	Phase current (crest value) of the motor M_{0_S} required for the continuous torque at standstill at a speed of n ≥ 0.1 Hz.
Continuous torque at standstill liquid	M_{0_L}	Nm	Continuous torque that can be applied to the motor output shaft at a speed of n ≥ 0.1 Hz.

Technical Data

Designation	Symbol	Unit	Description
Continuous current at standstill liquid	$I_{0_L(rms)}$	A	Phase current (crest value) of the motor M_{0_L} required for the continuous torque at standstill at a speed of n ≥ 0.1 Hz.
Maximum torque	M_{max}	M_{max}	Maximum torque that can be applied for about 400 ms at maximum current I_{max}. The maximum torque that can be attained depends on the drive control device used. Only the specified maximum torque in the selection lists is binding.
Maximum current	$I_{max(rms)}$	A	Maximum, briefly permissible phase current of the motor winding without adverse affect on the permanent magnet circuit of the motor.
Torque constant at 20° C	K_{M_N}	Nm/A	Relation of created torque to motor phase current at motor temperature 20°C. Valid up to ca. i = 2x I_{0_60}.
Voltage constant at 20°C	K_{EMK_1000}	V/min^{-1}	Root-mean-square value of the induced motor voltage at a motor temperature of 20 °C and 1,000 revolutions per minute.
Winding resistance at 20 °C	R_{12}	Ohm	Measured winding resistance between two strands.
Winding inductivity	L_{12}	mH	Measured inductivity between two strands.
Discharge capacity	C_{dis}	nF	Capacitiy of short-circuited power connections U, V, W against the motor housing.
Number of pole pairs	o	-	Quantity of pole pairs of the motor.
Moment of inertia of the rotor	J_{rot}	kgm^2	Moment of inertia of the rotor without the optional holding brake. Moment of inertia of holding brake is to be added, if necessary.
Thermal time constant	T_{th}	min	Time of the temperature increase to 63% of the final temperature of the motor housing with the motor loaded with the permissible S1 continuous torque. The thermal time constant is defined by the cooling type used. 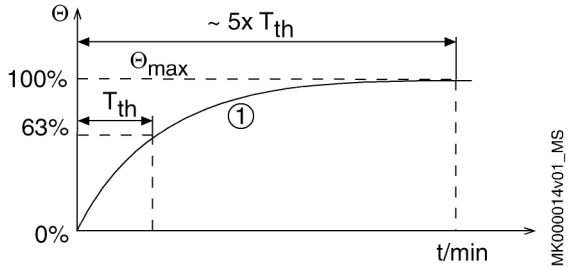 ①: Chronological development of the temperature at the motor housing Θmax: Highest temperature (motor housing) T_{th}: Thermal time constant Time of the temperature increase to 63% of the final temperature of the motor housing with the motor loaded with the permissible S1 continuous torque. The thermal time constant is defined by the cooling type used.
Maximum speed	n_{max}	min^{-1}	Maximum permissible velocity of the motor.
Sound pressure level	L_P	dB(A)	Determined values for 1 m distance from motor to measuring point.
Weight	m	kg	Mass of the motor.
Ambient temperature in operation	T_{amb}	°C	0 … 40 °C
Degree of protection	-	-	IP protection mode acc. to EN 60034
Insulation class	-	-	Insulation class according to DIN EN 60034-1
Holding torque	M_4	Nm	Transferable holding torque of holding brake.
Rated voltage	U_N	V	Input voltage of the holding brake chapter 9.10.1 "Holding Brake Electrically-Released" on page 223.
Rated current	I_N	A	Current consumption of the holding brake.
Connection time	t_1	ms	Duration until the holding brake applies.
Disconnection time	t_2	ms	Duration until the holding brake releases.
Moment of inertia of the brake	J_{Br}	kgm^2	Moment of inertia of holding brake must be added to determine the total moment of inertia to the moment of inertia of the motor.

Operating mode

IndraDyn S motors are documented according to the inspection criteria and measurement procedures of EN 60034-1. The specified characteristic curves correspond to operating mode S1 or S3.

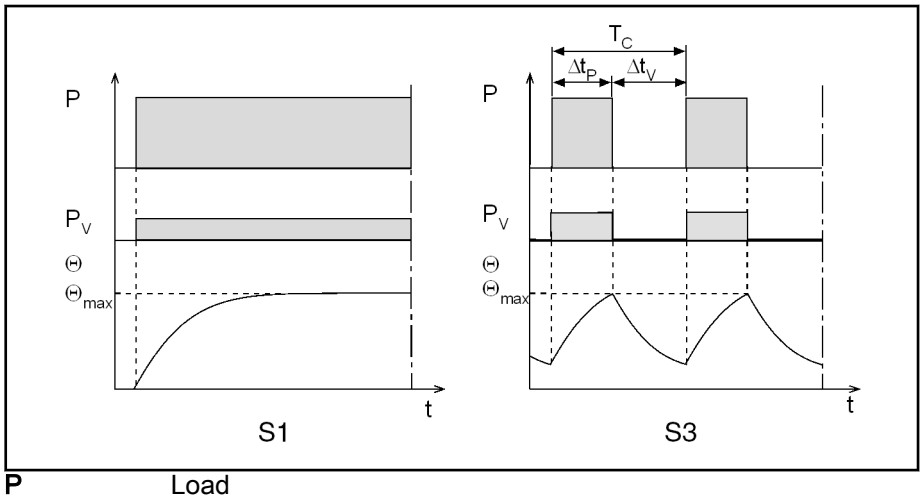

P	Load
PV	Electric losses
Θ	Temperature
Θmax	Highest temperature (motor housing)
t	Time
TC	Cycle time
ΔtP	Operating time with constant load
ΔtV	Idling time

Fig. 4-1: Operating modes according to EN 60034-1:1998

ON time

Operating mode S3 is supplemented by the specification of the duty cycle (DC) in %. The duty cycle is calculated as follows:

$$ED = \frac{\Delta t_P}{T_C} \cdot 100\%$$

ED	Relative duty cycle in %
ΔtP	Operating time with constant load

Fig. 4-2: Relative duty cycle

The values specified in the documentation have been determined on the basis of the following parameters:

Cycle time: 10 min

Duty cycle (DC): 25 %

Technical Data

Speed-torque characteristic curves

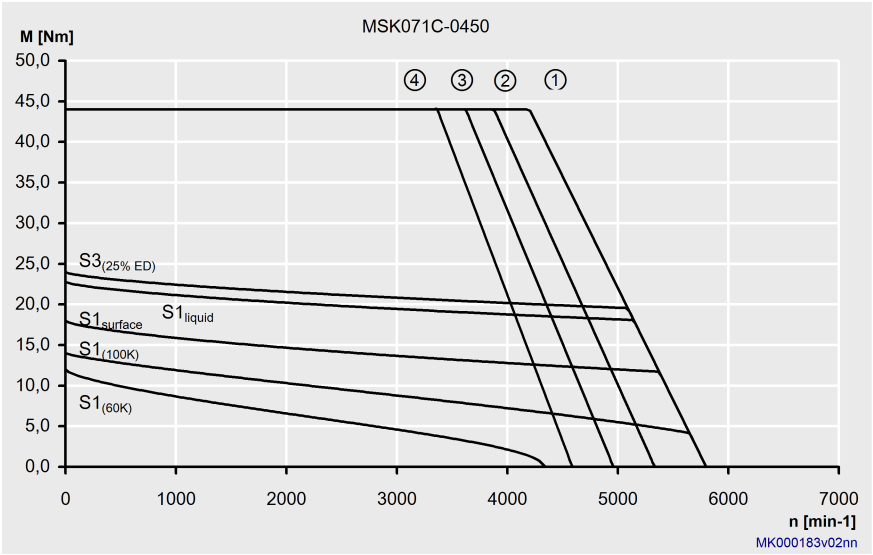

S1 (60K)	Continuous operation curve S1 acc. to EN 60034-1 for natural convection and maximum temperature increase of 60K on the housing.
S1 (100K)	Continuous operation curve S1 acc. to EN 60034-1 for natural convection and temperature increase of 100K on the winding.
S1 (surface)	Continuous operation curve S1 acc. to EN 60034-1 for operation with a fan unit and maximum temperature increase of 60K on the housing.
S1 (liquid)	Continuous operation curve S1 acc. to EN 60034-1 for operation with liquid cooling (water) and maximum temperature increase of 60K on the housing.
S3 (25 % DC)	Intermittent operation curve with 25% DC acc. to EN 60034-1 at a maximum cycle time of 10 min. and a maximum temperature increase on the housing of 60K
① - ④	Characteristic voltage limit curves. When a speed at the safe commutation limit is reached, the voltage limit curve limits the available maximum torque M_{max}. The maximum motor speed is determined by the DC link voltage used. There are separate characteristic curves for the various drive control devices in connection with the power supply unit and the supply voltage used.
①	M_{max} IndraDrive, controlled feed, 3 × AC 400 V
②	M_{max} IndraDrive, uncontrolled feed, 3 × AC 480 V
③	M_{max} IndraDrive, uncontrolled feed, 3 × AC 440 V
④	M_{max} IndraDrive, uncontrolled feed, 3 × AC 400 V

Tab. 4-1: Example of a characteristic curve of a motor

4.2 Technical Data Holding Brakes

Type	Holding torque	Input voltage	Rated current	Connection time	Disconnection time	Holding brake moment of inertia
	M_4 Nm	U_N V	I_N A	t_1 ms	t_2 ms	J_{br} kg*m²
MSK030_-____-__-__-__1-____	1.0	24	0,31	14	28	0.0000100
MSK040_-____-__-__-__1-____	4.0	24	0.50	25	35	0.0000230
MSK043C-____-__-__-__1-____	4.0	24	0.50	25	35	0.0000230
MSK050_-____-__-__-__1-____	50	24	0.65	20	60	0.0001070
MSK060_-____-__-__-__1-____	10	24	0.75	25	40	0.0000590

Type	Holding torque	Input voltage	Rated current	Connection time	Disconnection time	Holding brake moment of inertia
	M_4 Nm	U_N V	I_N A	t_1 ms	t_2 ms	J_{br} kg*m²
MSK061B-____-__-__-__1-____	10	24	0.96	25	40	0.0000600
MSK061C-____-__-__-__1-____	10	24	0.75	25	40	0.0000590
MSK070_-____-__-__-__1-____	23	24	0.79	35	180	0.0003000
MSK071_-____-__-__-__1-____	23	24	0.79	35	180	0.0003000
MSK071_-____-__-__-__2-____	30	24	0.94	40	270	0.0010600
MSK075_-____-__-__-__1-____	23	24	0.79	35	180	0.0003000
MSK075_-____-__-__-__2-____	30	24	0.94	40	270	0.0010600
MSK075E-____-__-__-__3-____	22	24	0.80	60	120	0.0003600
MSK076C-____-__-__-__1-____	11	24	0.71	10	50	0.0001660
MSK100_-____-__-__-__1-____	32	24	0.93	15	115	0.0012420
MSK100_-____-__-__-__2-____	70	24	1.29	53	97	0.0030000
MSK101_-____-__-__-__2-____	70	24	1.29	53	97	0.0030000
MSK101_-____-__-__-__3-____	120	24	1.46	80	150	0.0057500
MSK103_-____-__-__-__1-____	33	24	0.94	40	270	0.0010600
MSK103D-____-__-__-__2-____	60	24	1.04	60	300	0.0014700
MSK131_-____-__-__-__1-____	100	24	2.00	70	190	0.0053000
MSK131D-____-__-__-__2-____	240	24	1.87	130	300	0.0188000

Tab. 4-2: Holding brakes - Technical data (optional)

Technical Data

4.3 Technical Data Encoder MSK Motors

Designation	Symbol	Unit	S1	M1	S2	M2	S3	M3
Interface			Hiperface		EnDat 2.1		Hiperface	
Encoder design			Singleturn absolute	Multiturn absolute	Singleturn absolute	Multiturn absolute	Singleturn absolute	Multiturn absolute
Distinguishable revolutions			1	4,096	1	4,096	1	4,096
Signal periods			128		2,048		16	
System accuracy		Angular seconds	±120		±20		±520	
Output signal			1Vss					
Maximum encoder speed		min^{-1}	12,000	9,000	15,000	12,000		
Max. current consumption	$I_{Encoder}$	mA	60		150	250	50	
Supply voltage	$VCC_{En-coder}$	V	7...12		3.6...14		7...12	

Tab. 4-3: Technical data MSK encoder

Calculate position resolution

The actual **position resolution** can be done for every encoder type according to the following calcuation.

Calculation example: "Position resolution for M1 encoder"

from table:

Distinguishable revolutions: **4,096**

Number of lines **128**

out of documentation about the controllers:

Encoder resolution [1]: **13 bit**

Position resolution = number of lines x resolution of encoder x distinguishable revolutions

Position resolution = 128 × 2^{13} × 4,096 = **4,294,967,296** Information

[1] Encoder resolution depends from the connected controller.

Encoder Singleturn S1, S2, S3

These encoders permit absolute, indirect position recording within **one** mechanical rotation. The encoders replace separate incremental encoders on the motor.

☞ After a power failure or after the first POWER ON, the axis must always at first be moved to its home position.

Exception: Applications in which the maximum working path is within one mechanical rotation of the motor.

Encoder Multiturn absolute M1, M2, M3

These encoders permit absolute, indirect position recording within **4,096** mechanical rotations. The encoders replace a separate absolute value encoder on the motor. With this encoder version, the absolute position of the axis is preserved even after a switch-off.

4.4 MSK030

4.4.1 MSK030B - Technical Data

Designation	Symbol	Unit	MSK030B-0900-NN
Continuous torque at standstill 60 K	M_{0_60}	Nm	0.4
Continuous current at standstill 60 K	$I_{0_60(rms)}$	A	1.5
Continuous torque at standstill 100 K	M_{0_100}	Nm	0.4
Continuous current at standstill 100 K	$I_{0_100(rms)}$	A	1.7
Maximum torque	M_{max}	Nm	1.8
Maximum current	$I_{max(rms)}$	A	6.8
Torque constant at 20 °C	K_{M_N}	Nm/A	0.29
Voltage constant at 20 °C[1)]	K_{EMK_1000}	V/1,000 min-1	17.9
Winding resistance at 20 °C	R_{12}	Ohm	7.2
Winding inductivity	L_{12}	mH	8.1
Discharge capacity of the component	C_{dis}	nF	0.7
Number of pole pairs	o	-	3
Moment of inertia of the rotor	J_{rot}	kg*m^2	0.00001
Thermal time constant	T_{th_nom}	min	19.0
Maximum velocity	n_{max}	min^{-1}	9000
Sound pressure level	L_P	dB[A]	< 75
Weight [2)]	m	kg	1.3 (1.6)
Surrounding air temperature during operation	T_{amb}	°C	0 ... 40
Protection class acc. to EN 60034-5	-	-	IP65
Thermal class acc. to EN 60034-1	T.CL.	-	155
			Latest amendment: 2014-01-21

1) Manufacturing tolerance ±5 %
2) (...) Motors with holding brakes 1, 2, ...

Tab. 4-4: Technical Data

Technical Data

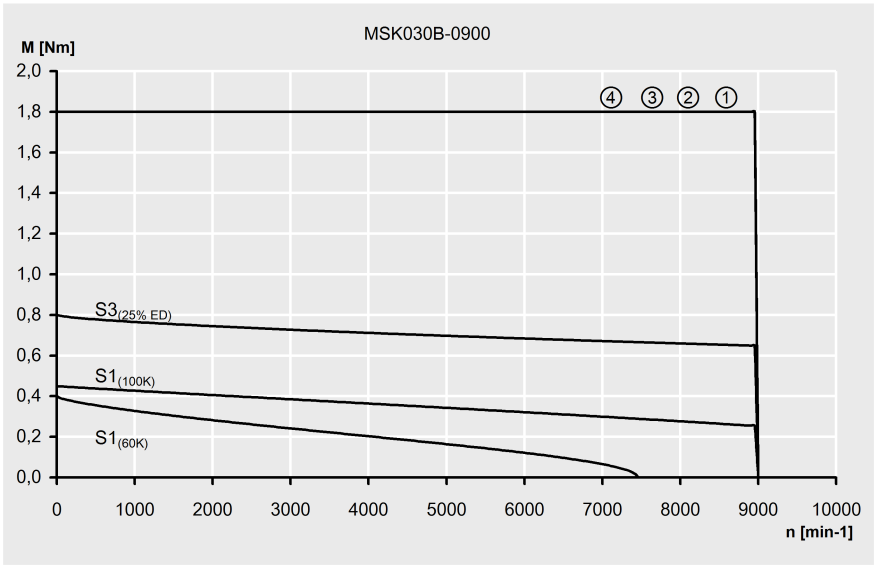

Fig. 4-3: Characteristic curves of an MSK030B-0900 motor

4.4.2 MSK030C - Technical Data

Designation	Symbol	Unit	MSK030C-0900-NN
Continuous torque at standstill 60 K	M_{0_60}	Nm	0.8
Continuous current at standstill 60 K	$I_{0_60(rms)}$	A	1.5
Continuous torque at standstill 100 K	M_{0_100}	Nm	0.9
Continuous current at standstill 100 K	$I_{0_100(rms)}$	A	1.7
Maximum torque	M_{max}	Nm	4.0
Maximum current	$I_{max(rms)}$	A	6.8
Torque constant at 20 °C	K_{M_N}	Nm/A	0.58
Voltage constant at 20 °C[1)]	K_{EMK_1000}	V/1,000 min-1	35.6
Winding resistance at 20 °C	R_{12}	Ohm	9.8
Winding inductivity	L_{12}	mH	14.1
Discharge capacity of the component	C_{dis}	nF	1.3
Number of pole pairs	o	-	3
Moment of inertia of the rotor	J_{rot}	$kg*m^2$	0.00003
Thermal time constant	T_{th_nom}	min	12.0
Maximum velocity	n_{max}	min^{-1}	9000
Sound pressure level	L_P	dB[A]	< 75
Weight [2)]	m	kg	1.9 (2.1)
Surrounding air temperature during operation	T_{amb}	°C	0 ... 40
Protection class acc. to EN 60034-5	-	-	IP65
Thermal class acc. to EN 60034-1	T.CL.	-	155
			Latest amendment: 2014-01-21

1) Manufacturing tolerance ±5 %
2) (...) Motors with holding brakes 1, 2, ...

Tab. 4-5: Technical Data

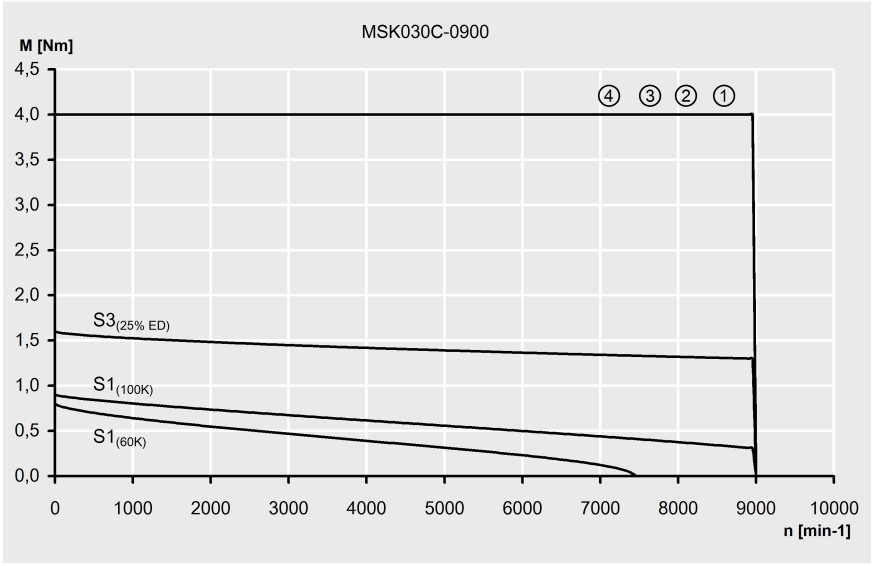

Fig. 4-4: Characteristic curves of an MSK030C-0900 motor

Technical Data

4.5 MSK040

4.5.1 MSK040B - Technical Data

Designation	Symbol	Unit	MSK040B-0450-NN	MSK040B-0600-NN
Continuous torque at standstill 60 K	M_{0_60}	Nm	1.7	
Continuous current at standstill 60 K	$I_{0_60(rms)}$	A	1.5	2.0
Continuous torque at standstill 100 K	M_{0_100}	Nm	1.9	
Continuous current at standstill 100 K	$I_{0_100(rms)}$	A	1.7	2.2
Maximum torque	M_{max}	Nm	5.1	
Maximum current	$I_{max(rms)}$	A	6.0	8.0
Torque constant at 20 °C	K_{M_N}	Nm/A	1.26	0.92
Voltage constant at 20 °C[1)]	K_{EMK_1000}	V/1,000 min-1	77.8	58.5
Winding resistance at 20 °C	R_{12}	Ohm	14.7	8.4
Winding inductivity	L_{12}	mH	64.7	35.4
Discharge capacity of the component	C_{dis}	nF	1.3	1.5
Number of pole pairs	o	-	4	
Moment of inertia of the rotor	J_{rot}	kg*m^2	0.00010	
Thermal time constant	T_{th_nom}	min	13.0	
Maximum velocity	n_{max}	min^{-1}	6000	7500
Sound pressure level	L_P	dB[A]	< 75	
Weight [2)]	m	kg	2.8 (3.1)	
Surrounding air temperature during operation	T_{amb}	°C	0 ... 40	
Protection class acc. to EN 60034-5	-	-	IP65	
Thermal class acc. to EN 60034-1	T.CL.	-	155	
				Latest amendment: 2014-04-29

1) Manufacturing tolerance ±5 %
2) (...) Motors with holding brakes 1, 2, ...

Tab. 4-6: MSK - Technical data

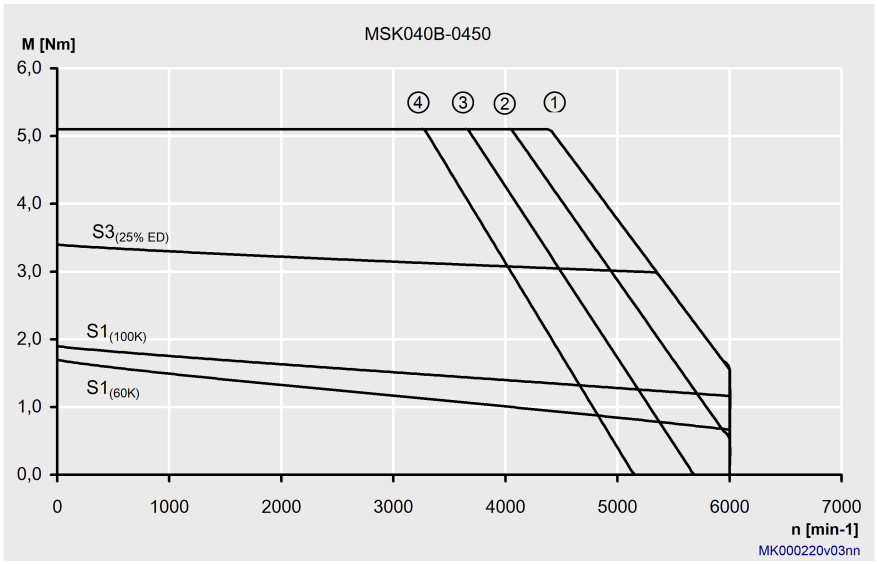

Fig. 4-5: Characteristic curves of an MSK040B-0450 motor

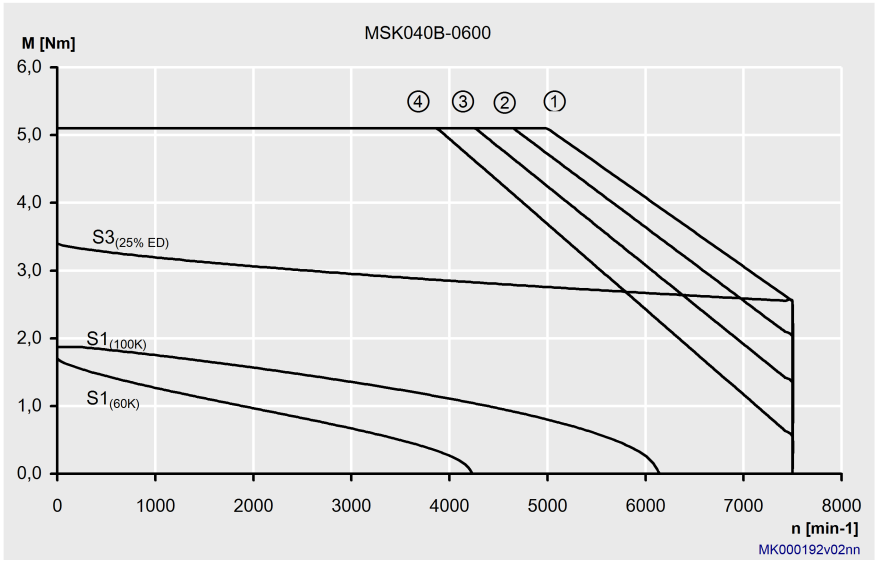

Fig. 4-6: Characteristic curves of an MSK040B-0600 motor

Technical Data

4.5.2 MSK040C - Technical Data

Designation	Symbol	Unit	MSK040C-0450-NN	MSK040C-0600-NN
Continuous torque at standstill 60 K	M_{0_60}	Nm	2.7	
Continuous current at standstill 60 K	$I_{0_60(rms)}$	A	2.4	3.1
Continuous torque at standstill 100 K	M_{0_100}	Nm	3.1	
Continuous current at standstill 100 K	$I_{0_100(rms)}$	A	3.1	4.7
Maximum torque	M_{max}	Nm	8.1	
Maximum current	$I_{max(rms)}$	A	9.6	12.4
Torque constant at 20 °C	K_{M_N}	Nm/A	1.25	0.95
Voltage constant at 20 °C[1)]	K_{EMK_1000}	V/1,000 min-1	76.7	58.2
Winding resistance at 20 °C	R_{12}	Ohm	7.4	3.9
Winding inductivity	L_{12}	mH	37.9	21.3
Discharge capacity of the component	C_{dis}	nF	2.0	
Number of pole pairs	o	-	4	
Moment of inertia of the rotor	J_{rot}	kg*m²	0.00014	
Thermal time constant	T_{th_nom}	min	16.0	
Maximum velocity	n_{max}	min-1	6000	7500
Sound pressure level	L_P	dB[A]	< 75	
Weight [2)]	m	kg	3.6 (3.9)	
Surrounding air temperature during operation	T_{amb}	°C	0 ... 40	
Protection class acc. to EN 60034-5	-	-	IP65	
Thermal class acc. to EN 60034-1	T.CL.	-	155	
				Latest amendment: 2014-01-21

1) Manufacturing tolerance ±5 %
2) (...) Motors with holding brakes 1, 2, ...

Tab. 4-7: MSK - Technical data (standard cooling)

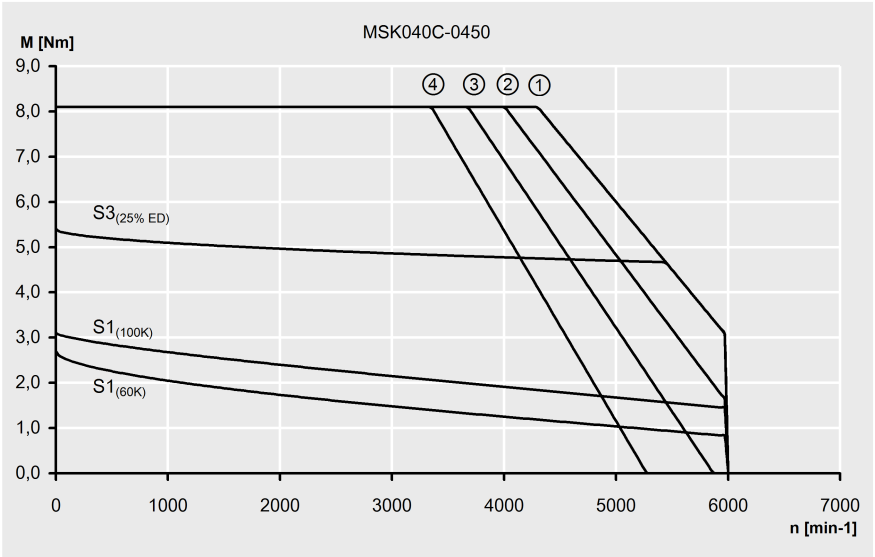

Fig. 4-7: Characteristic curves of an MSK040C-0450 motor

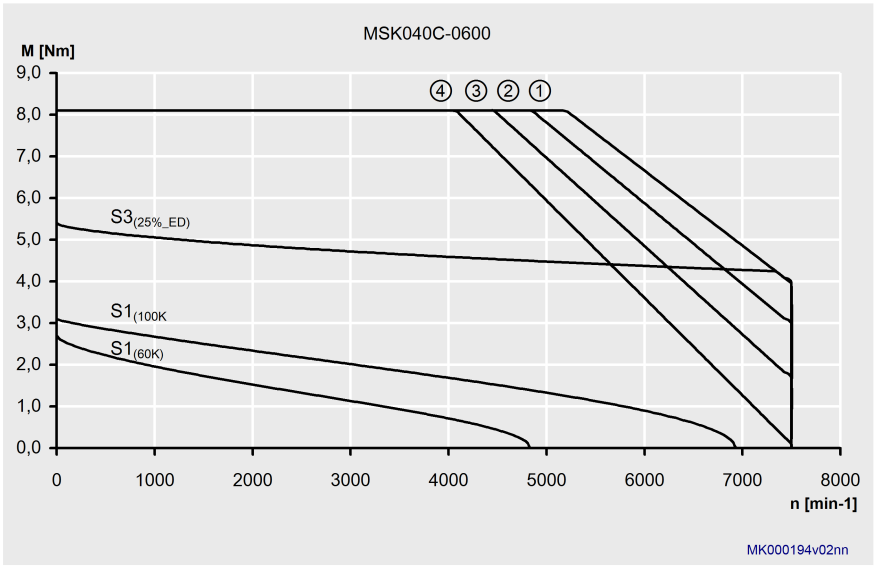

Fig. 4-8: Characteristic curves of an MSK040C-0600 motor

Technical Data

4.6 MSK043

4.6.1 MSK043C - Technical Data

Designation	Symbol	Unit	MSK043C-0600-NN
Continuous torque at standstill 60 K	M_{0_60}	Nm	2.7
Continuous current at standstill 60 K	$I_{0_60(rms)}$	A	3.6
Continuous torque at standstill 100 K	M_{0_100}	Nm	3.1
Continuous current at standstill 100 K	$I_{0_100(rms)}$	A	4.3
Maximum torque	M_{max}	Nm	12.5
Maximum current	$I_{max(rms)}$	A	18.5
Torque constant at 20 °C	K_{M_N}	Nm/A	0.78
Voltage constant at 20 °C[1)]	K_{EMK_1000}	V/1,000 min-1	48.0
Winding resistance at 20 °C	R_{12}	Ohm	2.75
Winding inductivity	L_{12}	mH	13.4
Discharge capacity of the component	C_{dis}	nF	2.1
Number of pole pairs	o	-	4
Moment of inertia of the rotor	J_{rot}	$kg*m^2$	0.00008
Thermal time constant	T_{th_nom}	min	17.0
Maximum velocity	n_{max}	min^{-1}	7500
Sound pressure level	L_P	dB[A]	< 75
Weight [2)]	m	kg	3.6 (3.9)
Surrounding air temperature during operation	T_{amb}	°C	0 ... 40
Protection class acc. to EN 60034-5	-	-	IP65
Thermal class acc. to EN 60034-1	T.CL.	-	155
			Latest amendment: 2014-01-21

1) Manufacturing tolerance ±5 %
2) (...) Motors with holding brakes 1, 2, ...

Tab. 4-8: MSK - Technical data

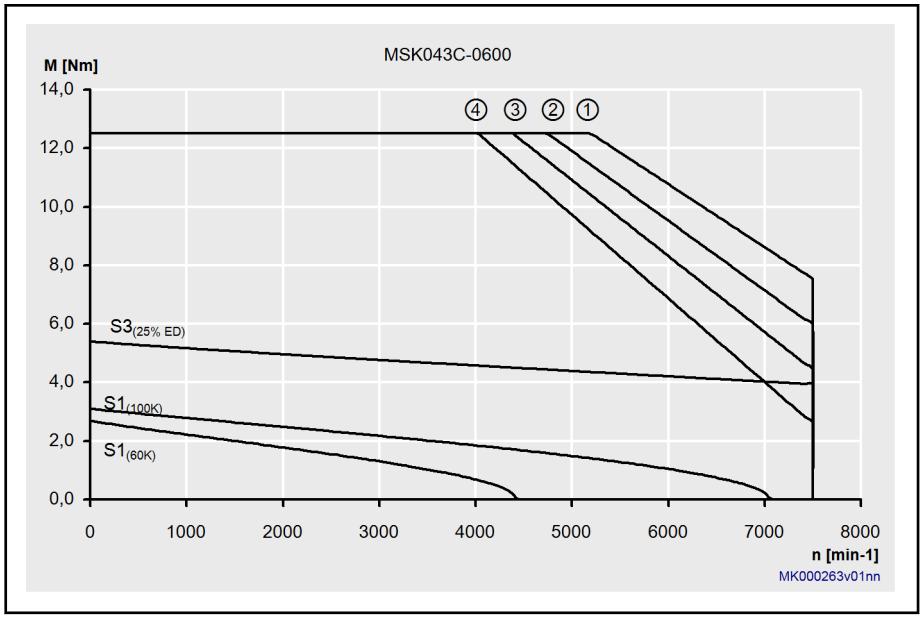

Fig. 4-9: Characteristic curves of an MSK043C-0600 motor

Technical Data

4.7 MSK050

4.7.1 MSK050B - Technical Data

Designation	Symbol	Unit	MSK050B-0300-NN	MSK050B-0450-NN	MSK050B-0600-NN
Continuous torque at standstill 60 K	M_{0_60}	Nm	3.0		
Continuous current at standstill 60 K	$I_{0_60(rms)}$	A	1.8	2.8	3.7
Continuous torque at standstill 100 K	M_{0_100}	Nm	3.4		
Continuous current at standstill 100 K	$I_{0_100(rms)}$	A	2.0	3.2	4.2
Maximum torque	M_{max}	Nm	9.0		
Maximum current	$I_{max(rms)}$	A	7.2	11.2	14.8
Torque constant at 20 °C	K_{M_N}	Nm/A	1.80	1.20	0.90
Voltage constant at 20 °C[1)]	K_{EMK_1000}	V/1,000 min-1	111.0	73.5	55.0
Winding resistance at 20 °C	R_{12}	Ohm	13	5.7	3.3
Winding inductivity	L_{12}	mH	76.4	33.6	19.9
Discharge capacity of the component	C_{dis}	nF	2.1	1.4	2.1
Number of pole pairs	o	-	4		
Moment of inertia of the rotor	J_{rot}	kg*m^2	0.00028		
Thermal time constant	T_{th_nom}	min	8.0		
Maximum velocity	n_{max}	min^{-1}	4300	6000	
Sound pressure level	L_P	dB[A]	<75		
Weight [2)]	m	kg	4.0 (4.9)		
Surrounding air temperature during operation	T_{amb}	°C	0 ... 40		
Protection class acc. to EN 60034-5	-	-	IP65		
Thermal class acc. to EN 60034-1	T.CL.	-	155		
Latest amendment: 2014-01-21					

1) Manufacturing tolerance ±5 %
2) (...) Motors with holding brakes 1, 2, ...

Tab. 4-9: Technical Data

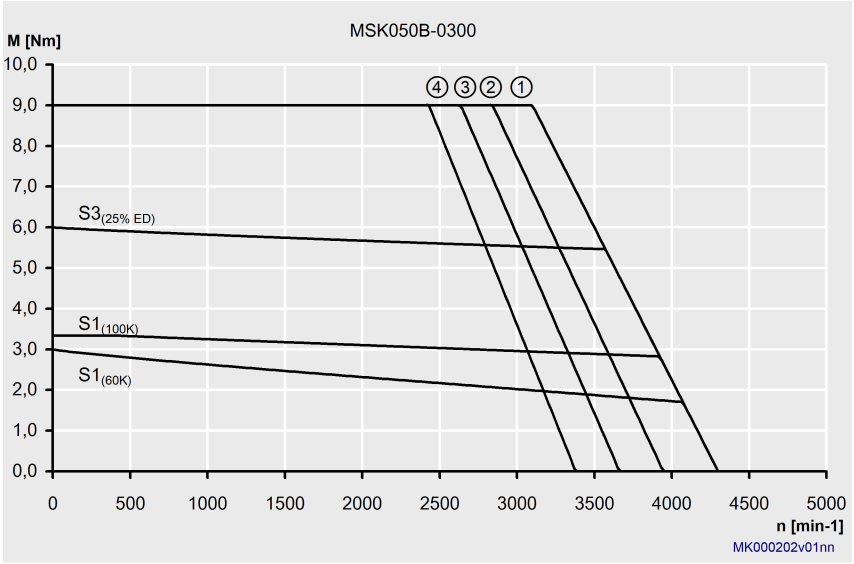

Fig. 4-10: Characteristic curves of an MSK050B-0300 motor

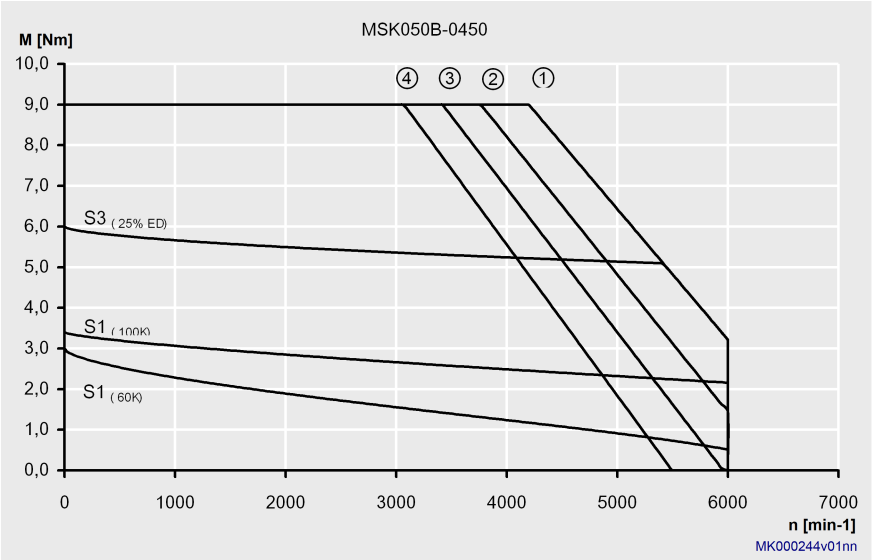

Fig. 4-11: Characteristic curves of an MSK050B-0450 motor

Technical Data

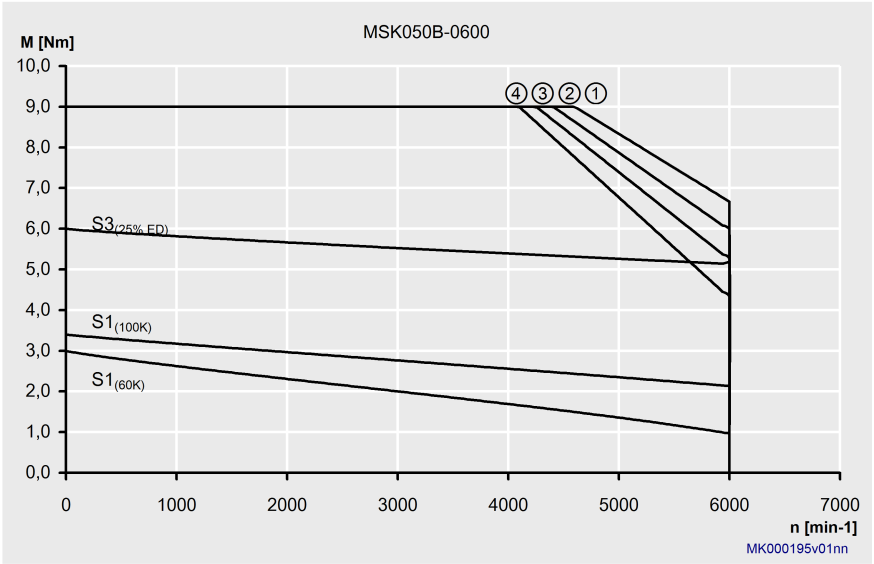

Fig. 4-12: Characteristic curves of an MSK050B-0600 motor

4.7.2 MSK050C - Technical Data

Designation	Symbol	Unit	MSK050C-0300-NN	MSK050C-0450-NN	MSK050C-0600-NN
Continuous torque at standstill 60 K	M_{0_60}	Nm	5.0		
Continuous current at standstill 60 K	$I_{0_60(rms)}$	A	3.1	4.7	6.2
Continuous torque at standstill 100 K	M_{0_100}	Nm	5.5		
Continuous current at standstill 100 K	$I_{0_100(rms)}$	A	3.4	5.2	6.8
Maximum torque	M_{max}	Nm	15.0		
Maximum current	$I_{max(rms)}$	A	12.4	18.8	24.8
Torque constant at 20 °C	K_{M_N}	Nm/A	1.77	1.16	0.89
Voltage constant at 20 °C[1)]	K_{EMK_1000}	V/1,000 min-1	109.0	71.5	55.0
Winding resistance at 20 °C	R_{12}	Ohm	6.6	3.2	1.7
Winding inductivity	L_{12}	mH	46.1	20.2	11
Discharge capacity of the component	C_{dis}	nF	2.6	2.4	2.6
Number of pole pairs	o	-	4		
Moment of inertia of the rotor	J_{rot}	kg*m²	0.00033		
Thermal time constant	T_{th_nom}	min	14.0		
Maximum velocity	n_{max}	min-1	4700	6000	
Sound pressure level	L_P	dB[A]	< 75		
Weight [2)]	m	kg	5.4 (6.3)		
Surrounding air temperature during operation	T_{amb}	°C	0 ... 40		
Protection class acc. to EN 60034-5	-	-	IP65		
Thermal class acc. to EN 60034-1	T.CL.	-	155		
					Latest amendment: 2014-01-21

1) Manufacturing tolerance ±5 %
2) (...) Motors with holding brakes 1, 2, ...

Tab. 4-10: MSK - Technical data

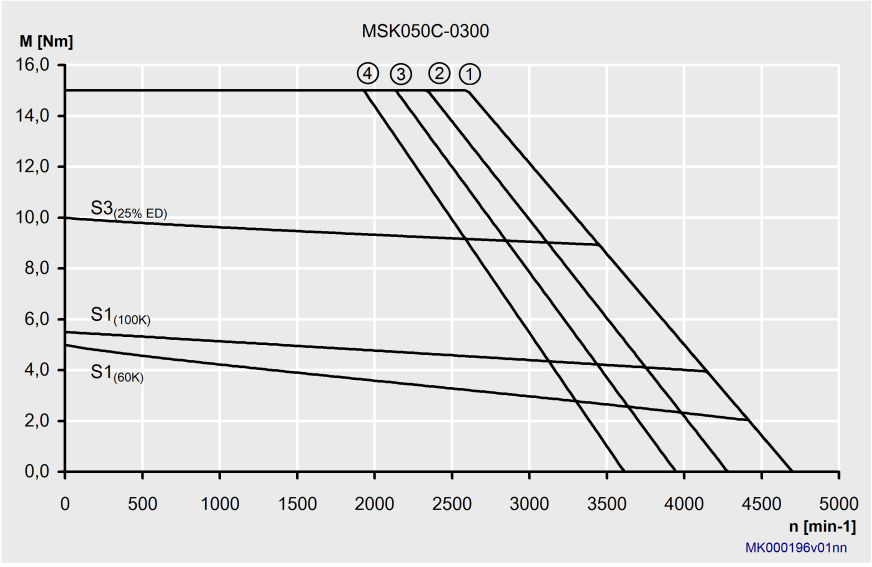

Fig. 4-13: Characteristic curves of an MSK050C-0300 motor

Technical Data

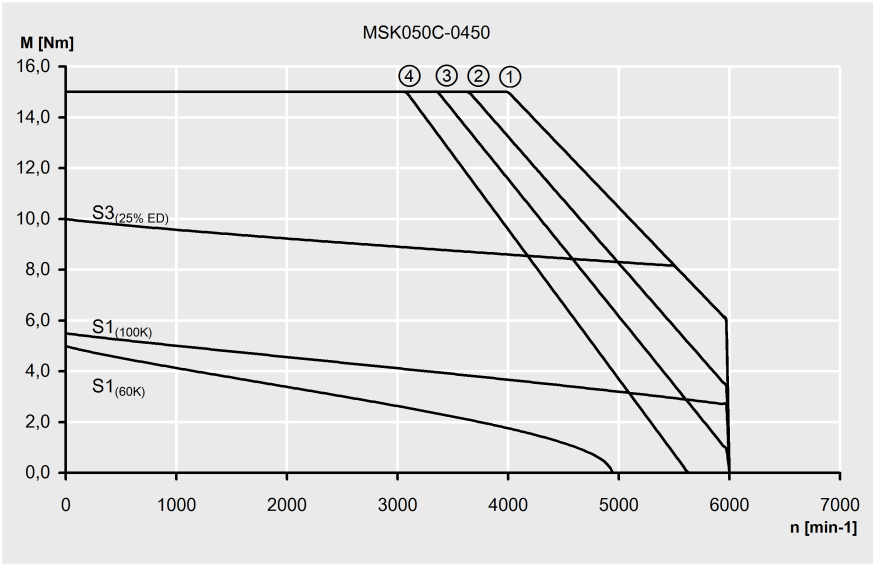

Fig. 4-14: Characteristic curves of an MSK050C-0450 motor

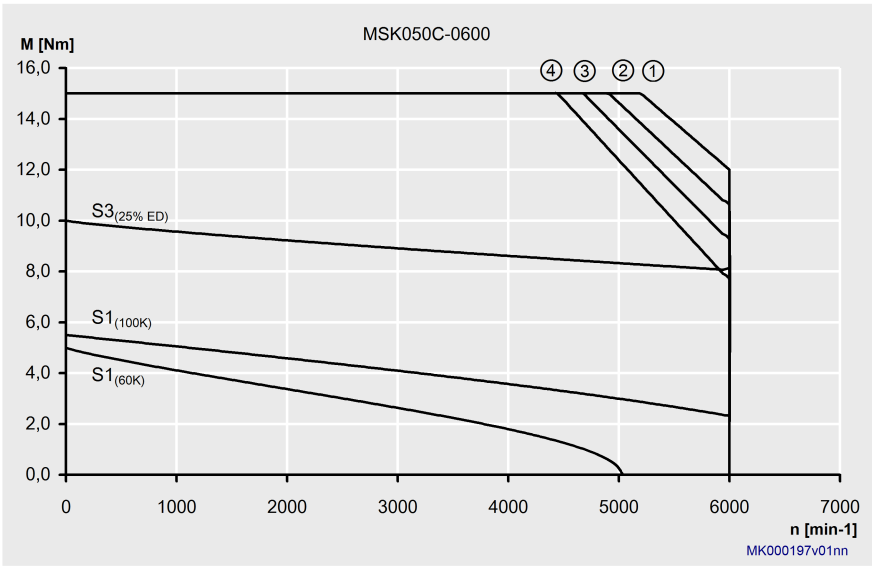

Fig. 4-15: Characteristic curves of an MSK050C-0600 motor

4.8 MSK060

4.8.1 MSK060B - Technical Data

Designation	Symbol	Unit	MSK060B-0300-NN	MSK060B-0600-NN
Continuous torque at standstill 60 K	M_{0_60}	Nm	5.0	
Continuous current at standstill 60 K	$I_{0_60(rms)}$	A	3.0	6.1
Continuous torque at standstill 100 K	M_{0_100}	Nm	5.5	
Continuous current at standstill 100 K	$I_{0_100(rms)}$	A	3.3	6.7
Maximum torque	M_{max}	Nm	15.0	
Maximum current	$I_{max(rms)}$	A	12.0	24.4
Torque constant at 20 °C	K_{M_N}	Nm/A	1.85	0.90
Voltage constant at 20 °C[1)]	K_{EMK_1000}	V/1,000 min-1	113.5	55.2
Winding resistance at 20 °C	R_{12}	Ohm	7.3	1.85
Winding inductivity	L_{12}	mH	73	18
Discharge capacity of the component	C_{dis}	nF	2.1	
Number of pole pairs	o	-	4	
Moment of inertia of the rotor	J_{rot}	kg*m²	0.00048	
Thermal time constant	T_{th_nom}	min	16.0	
Maximum velocity	n_{max}	min-1	4800	6000
Sound pressure level	L_P	dB[A]	< 75	
Weight [2)]	m	kg	5.7 (6.4)	
Surrounding air temperature during operation	T_{amb}	°C	0 ... 40	
Protection class acc. to EN 60034-5	-	-	IP65	
Thermal class acc. to EN 60034-1	T.CL.	-	155	
Latest amendment: 2014-01-21				

1) Manufacturing tolerance ±5 %
2) (...) Motors with holding brakes 1, 2, ...

Tab. 4-11: Technical Data

Technical Data

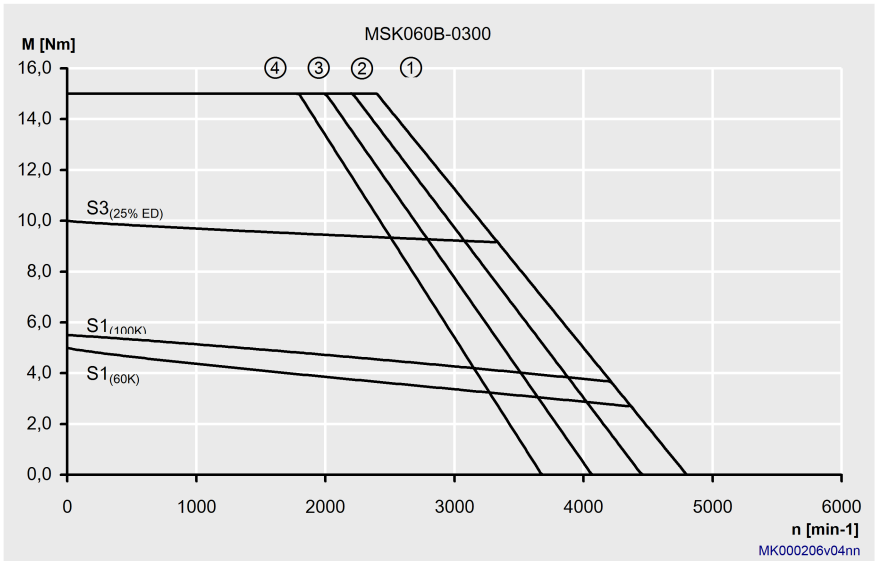

Fig. 4-16: Characteristic curves of an MSK060B-0300 motor

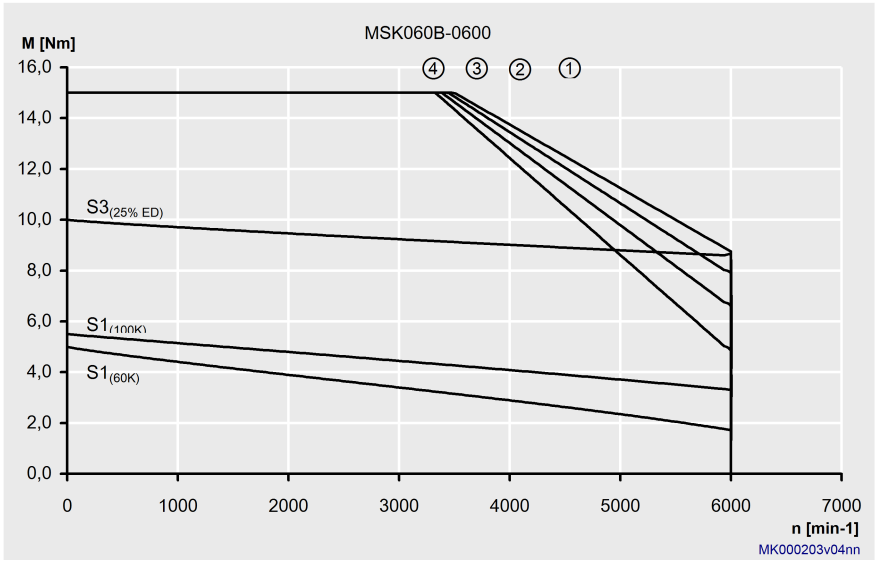

Fig. 4-17: Characteristic curves of an MSK060B-0600 motor

4.8.2 MSK060C - Technical Data

Designation	Symbol	Unit	MSK060C-0300-NN	MSK060C-0600-NN
Continuous torque at standstill 60 K	M_{0_60}	Nm	8.0	
Continuous current at standstill 60 K	$I_{0_60(rms)}$	A	4.8	9.5
Continuous torque at standstill 100 K	M_{0_100}	Nm	8.8	
Continuous current at standstill 100 K	$I_{0_100(rms)}$	A	5.3	10.5
Continuous torque at standstill, surface	M_{0_S}	Nm	12.0	
Continuous current at standstill, surface	$I_{0_S(rms)}$	A	7.2	14.3
Maximum torque	M_{max}	Nm	24.0	
Maximum current	$I_{max(rms)}$	A	19.2	38.0
Torque constant at 20 °C	K_{M_N}	Nm/A	1.85	0.93
Voltage constant at 20 °C[1)]	K_{EMK_1000}	V/1,000 min-1	114.0	57.0
Winding resistance at 20 °C	R_{12}	Ohm	3.1	0.8
Winding inductivity	L_{12}	mH	35.9	8.6
Discharge capacity of the component	C_{dis}	nF	2.1	2.2
Number of pole pairs	o	-	4	
Moment of inertia of the rotor	J_{rot}	kg*m^2	0.00080	
Thermal time constant	T_{th_nom}	min	14.0	
Maximum velocity	n_{max}	min^{-1}	4900	6000
Sound pressure level	L_P	dB[A]	< 75	
Weight [2)]	m	kg	8.4 (9.2)	
Surrounding air temperature during operation	T_{amb}	°C	0 ... 40	
Protection class acc. to EN 60034-5	-	-	IP65	
Thermal class acc. to EN 60034-1	T.CL.	-	155	
				Latest amendment: 2014-01-21

1) Manufacturing tolerance ±5 %
2) (...) Motors with holding brakes 1, 2, ...

Tab. 4-12: Technical Data

Technical Data

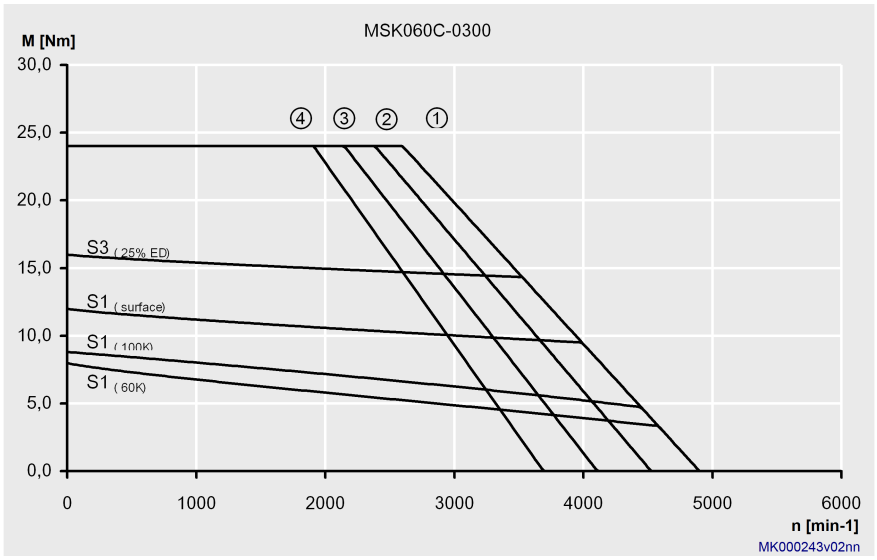

Fig. 4-18: Characteristic curves of an MSK060C-0300 motor

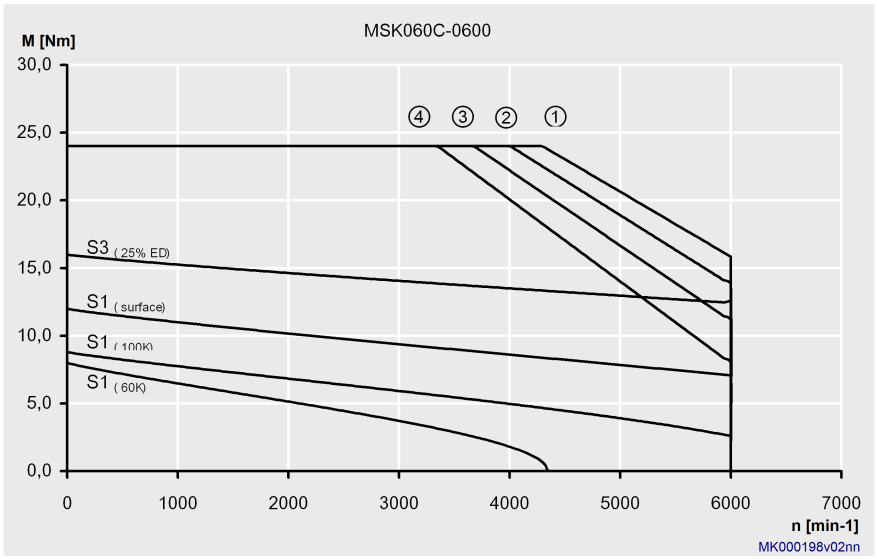

Fig. 4-19: Characteristic curves of an MSK060C-0600 motor

4.9 MSK061

4.9.1 MSK061B - Technical Data

Designation	Symbol	Unit	MSK061B-0300-NN
Continuous torque at standstill 60 K	M_{0_60}	Nm	3.5
Continuous current at standstill 60 K	$I_{0_60(rms)}$	A	1.9
Continuous torque at standstill 100 K	M_{0_100}	Nm	3.9
Continuous current at standstill 100 K	$I_{0_100(rms)}$	A	2.1
Maximum torque	M_{max}	Nm	14.0
Maximum current	$I_{max(rms)}$	A	8.6
Torque constant at 20 °C	K_{M_N}	Nm/A	2.05
Voltage constant at 20 °C[1)]	K_{EMK_1000}	V/1,000 min-1	126.4
Winding resistance at 20 °C	R_{12}	Ohm	13.5
Winding inductivity	L_{12}	mH	44.0
Discharge capacity of the component	C_{dis}	nF	1.8
Number of pole pairs	o	-	4
Moment of inertia of the rotor	J_{rot}	kg*m^2	0.00044
Thermal time constant	T_{th_nom}	min	15.0
Maximum velocity	n_{max}	min^{-1}	4200
Sound pressure level	L_P	dB[A]	< 75
Weight [2)]	m	kg	5.7 (6.4)
Surrounding air temperature during operation	T_{amb}	°C	0 ... 40
Protection class acc. to EN 60034-5	-	-	IP65
Thermal class acc. to EN 60034-1	T.CL.	-	155
			Latest amendment: 2014-01-21

1) Manufacturing tolerance ±5 %
2) (...) Motors with holding brakes 1, 2, ...

Tab. 4-13: MSK - Technical data

Technical Data

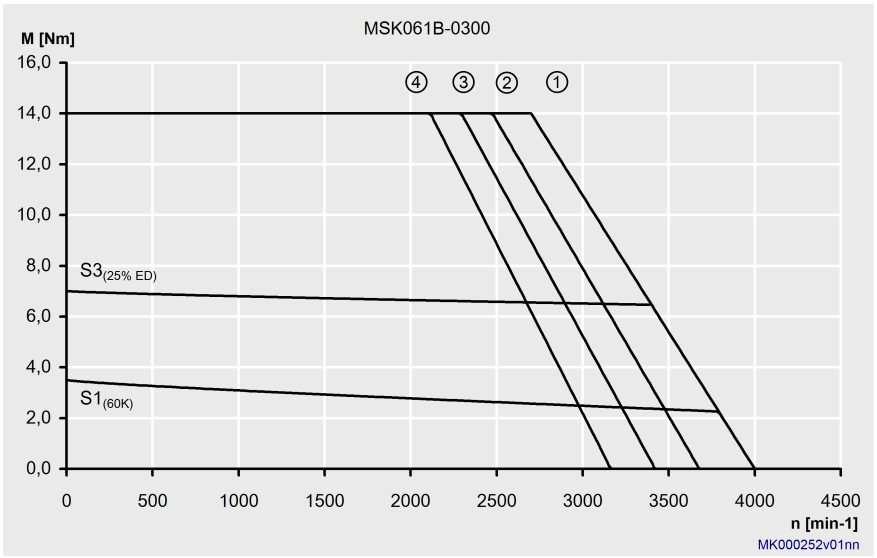

Fig. 4-20: Characteristic curves of an MSK061B-0300 motor

4.9.2 MSK061C - Technical Data

Designation	Symbol	Unit	MSK061C-0200-NN	MSK061C-0300-NN	MSK061C-0600-NN
Continuous torque at standstill 60 K	M_{0_60}	Nm	8.0		
Continuous current at standstill 60 K	$I_{0_60(rms)}$	A	3.2	4.3	7.7
Continuous torque at standstill 100 K	M_{0_100}	Nm	9.0		
Continuous current at standstill 100 K	$I_{0_100(rms)}$	A	3.6	4.8	8.7
Continuous torque at standstill, surface	M_{0_S}	Nm	12.0		
Continuous current at standstill, surface	$I_{0_S(rms)}$	A	4.8	6.5	11.6
Maximum torque	M_{max}	Nm	32.0		
Maximum current	$I_{max(rms)}$	A	14.4	19.4	34.7
Torque constant at 20 °C	K_{M_N}	Nm/A	2.80	2.04	1.14
Voltage constant at 20 °C[1)]	K_{EMK_1000}	V/1,000 min-1	174.9	125.7	70.5
Winding resistance at 20 °C	R_{12}	Ohm	8.1	4.5	1.55
Winding inductivity	L_{12}	mH	36.5	21.4	6.7
Discharge capacity of the component	C_{dis}	nF	2.7	2.4	2.1
Number of pole pairs	o	-	4		
Moment of inertia of the rotor	J_{rot}	kg*m^2	0.00075		
Thermal time constant	T_{th_nom}	min	18.0		15.0
Maximum velocity	n_{max}	min^{-1}	3100	4200	6000
Sound pressure level	L_P	dB[A]	< 75		
Weight [2)]	m	kg	8.3 (8.8)		
Surrounding air temperature during operation	T_{amb}	°C	0 ... 40		
Protection class acc. to EN 60034-5	-	-	IP65		
Thermal class acc. to EN 60034-1	T.CL.	-	155		
Latest amendment: 2014-01-21					

1) Manufacturing tolerance ±5 %
2) (...) Motors with holding brakes 1, 2, ...

Tab. 4-14: MSK - Technical data

Technical Data

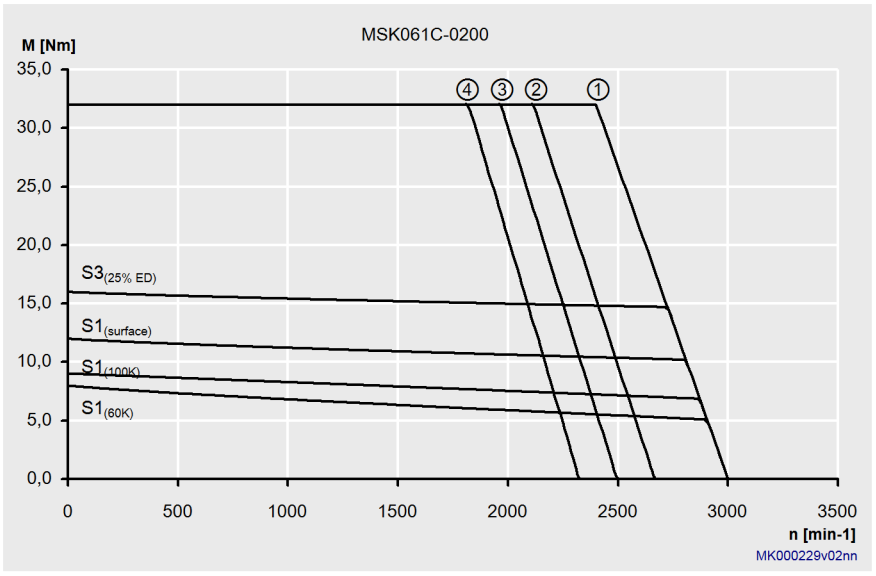

Fig. 4-21: Characteristic curves of an MSK061C-0200 motor

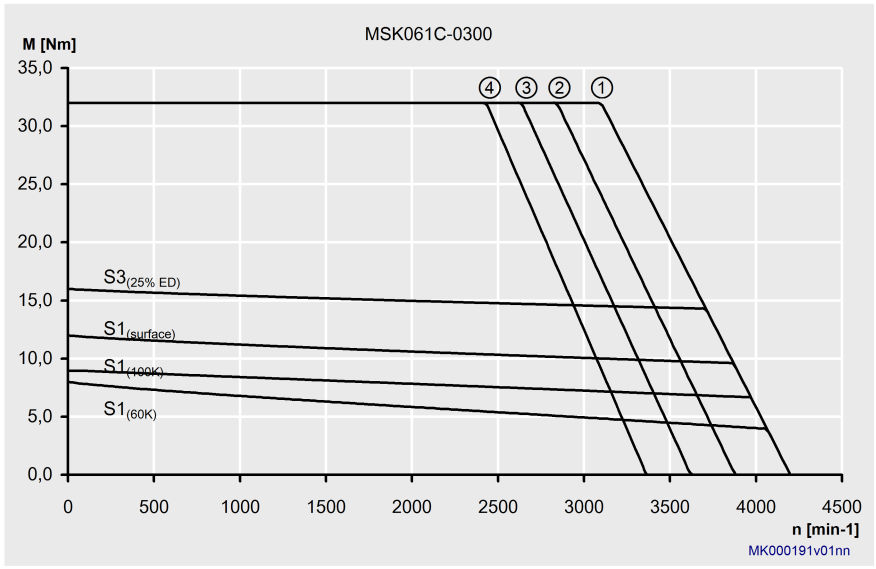

Fig. 4-22: Characteristic curves of an MSK061C-0300 motor

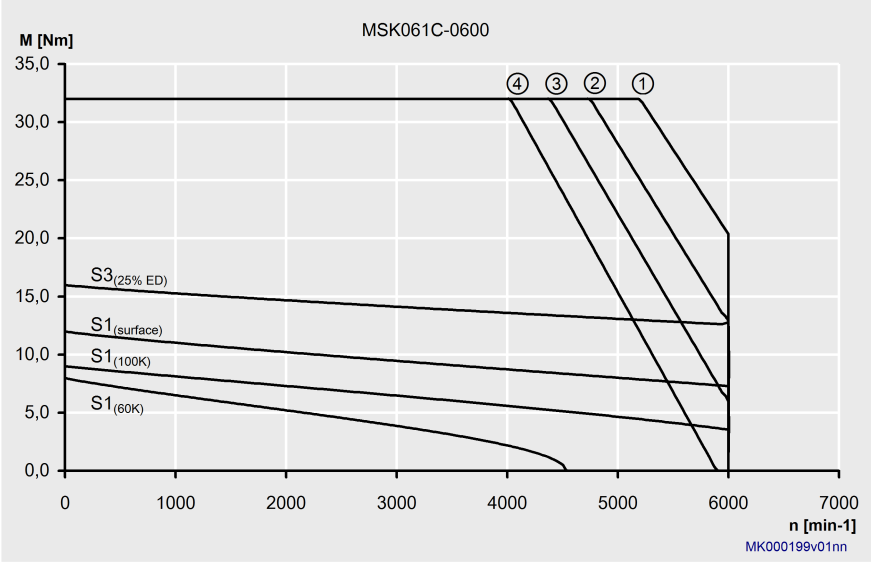

Fig. 4-23: Characteristic curves of an MSK061C-0600 motor

Technical Data

4.10 MSK070

4.10.1 MSK070C - Technical Data

Designation	Symbol	Unit	MSK070C-0150-NN	MSK070C-0300-NN	MSK070C-0450-NN
Continuous torque at standstill 60 K	M_{0_60}	Nm	13.0		
Continuous current at standstill 60 K	$I_{0_60(rms)}$	A	4.1	8.2	12.3
Continuous torque at standstill 100 K	M_{0_100}	Nm	14.5		
Continuous current at standstill 100 K	$I_{0_100(rms)}$	A	4.6	9.2	13.7
Continuous torque at standstill. surface	M_{0_S}	Nm	19.5		
Continuous current at standstill, surface	$I_{0_S(rms)}$	A	6.2	12.3	18.5
Maximum torque	M_{max}	Nm	33.0		
Maximum current	$I_{max(rms)}$	A	12.6	25.0	36.9
Torque constant at 20 °C	K_{M_N}	Nm/A	3.47	1.74	1.16
Voltage constant at 20 °C[1)]	K_{EMK_1000}	V/1,000 min-1	213.2	107.0	71.3
Winding resistance at 20 °C	R_{12}	Ohm	4.7	1.13	0.55
Winding inductivity	L_{12}	mH	34.9	8.3	4.0
Discharge capacity of the component	C_{dis}	nF	3.8	4.0	3.1
Number of pole pairs	o	-	6		
Moment of inertia of the rotor	J_{rot}	kg*m^2	0.00291		
Thermal time constant	T_{th_nom}	min	22.0		31.0
Maximum velocity	n_{max}	min^{-1}	2,500	5,500	6,000
Sound pressure level	L_P	dB[A]	< 75		
Weight [2)]	m	kg	11.7 (13.2)		
Surrounding air temperature during operation	T_{amb}	°C	0 ... 40		
Protection class acc. to EN 60034-5	-	-	IP65		
Thermal class acc. to EN 60034-1	T.CL.	-	155		
Latest amendment: 2014-01-21					

1) Manufacturing tolerance ±5 %
2) (...) Motors with holding brakes 1, 2, ...

Tab. 4-15: MSK - Technical data

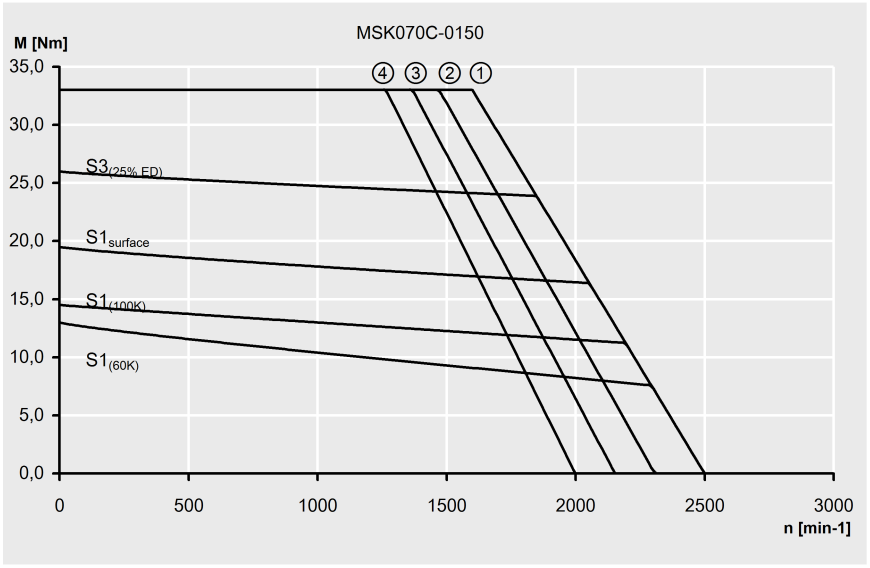

Fig. 4-24: Characteristic curves of an MSK070C-0150 motor

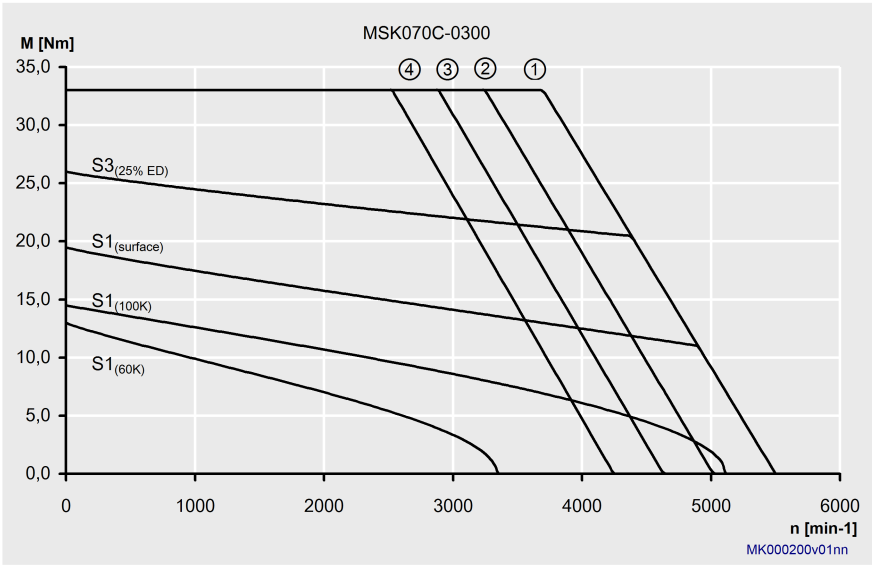

Fig. 4-25: Characteristic curves of an MSK070C-0300 motor

Technical Data

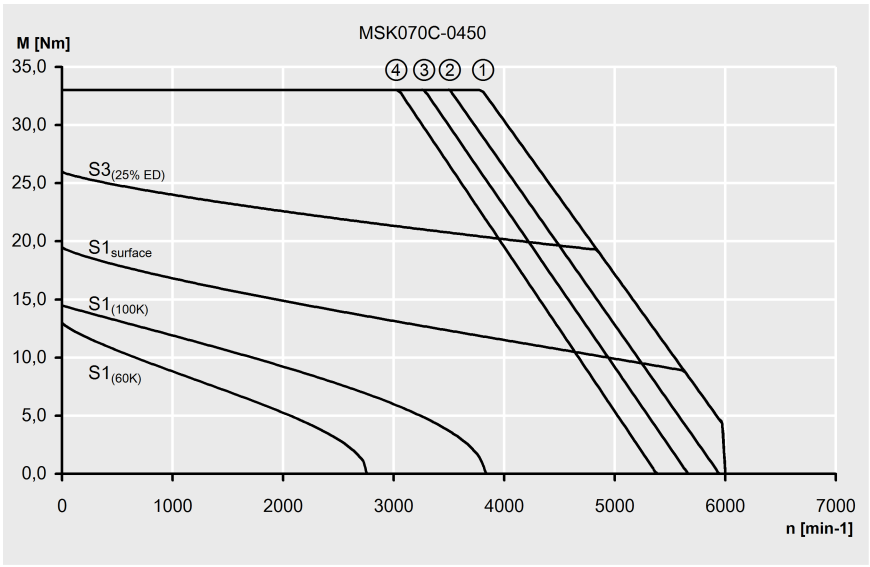

Fig. 4-26: Characteristic curves of an MSK070C-0450 motor

4.10.2 MSK070D - Technical Data

Designation	Symbol	Unit	MSK070D-0150-NN	MSK070D-0300-NN	MSK070D-0450-NN
Continuous torque at standstill 60 K	M_{0_60}	Nm	17.5		
Continuous current at standstill 60 K	$I_{0_60(rms)}$	A	6.2	11.0	16.6
Continuous torque at standstill 100 K	M_{0_100}	Nm	20.0		
Continuous current at standstill 100 K	$I_{0_100(rms)}$	A	7.1	12.6	22.0
Continuous torque at standstill. surface	M_{0_S}	Nm	26.3		
Continuous current at standstill. surface	$I_{0_S(rms)}$	A	9.3	16.5	24.9
Maximum torque	M_{max}	Nm	52.5		
Maximum current	$I_{max(rms)}$	A	24.8	33.0	49.8
Torque constant at 20 °C	K_{M_N}	Nm/A	3.10	1.75	1.16
Voltage constant at 20 °C[1)]	K_{EMK_1000}	V/1,000 min-1	210.0	107.3	71.1
Winding resistance at 20 °C	R_{12}	Ohm	3.2	0.75	0.37
Winding inductivity	L_{12}	mH	25.9	6.0	3.0
Discharge capacity of the component	C_{dis}	nF	5.0	4.5	
Number of pole pairs	o	-	6		
Moment of inertia of the rotor	J_{rot}	kg*m^2	0.00375		
Thermal time constant	T_{th_nom}	min	23.0		
Maximum velocity	n_{max}	min^{-1}	2700	4900	6000
Sound pressure level	L_P	dB[A]	< 75		
Weight [2)]	m	kg	14.0 (15.6)		
Surrounding air temperature during operation	T_{amb}	°C	0 ... 40		
Protection class acc. to EN 60034-5	-	-	IP65		
Thermal class acc. to EN 60034-1	T.CL.	-	155		
Latest amendment: 2014-01-21					

1) Manufacturing tolerance ±5 %
2) (...) Motors with holding brakes 1, 2, ...

Tab. 4-16: MSK - Technical data

Technical Data

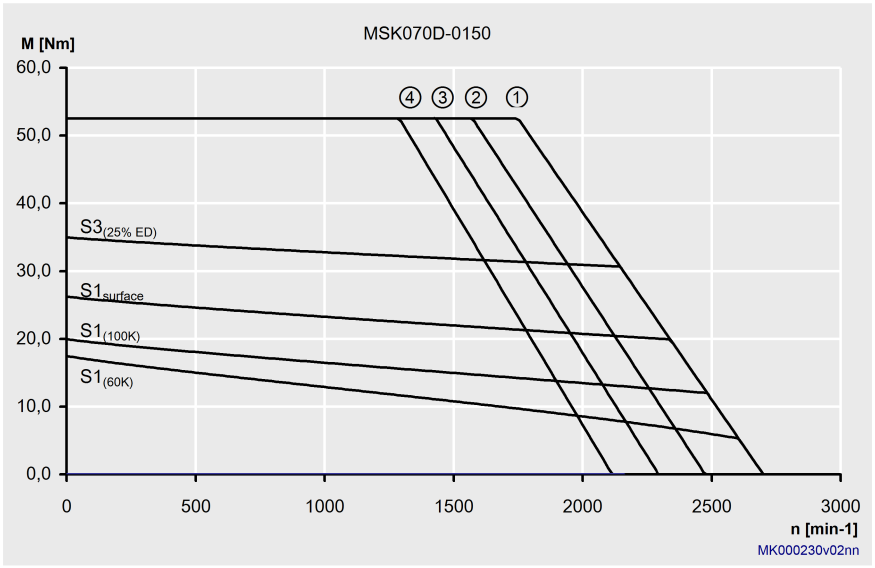

Fig. 4-27: Characteristic curves of an MSK070D-0150 motor

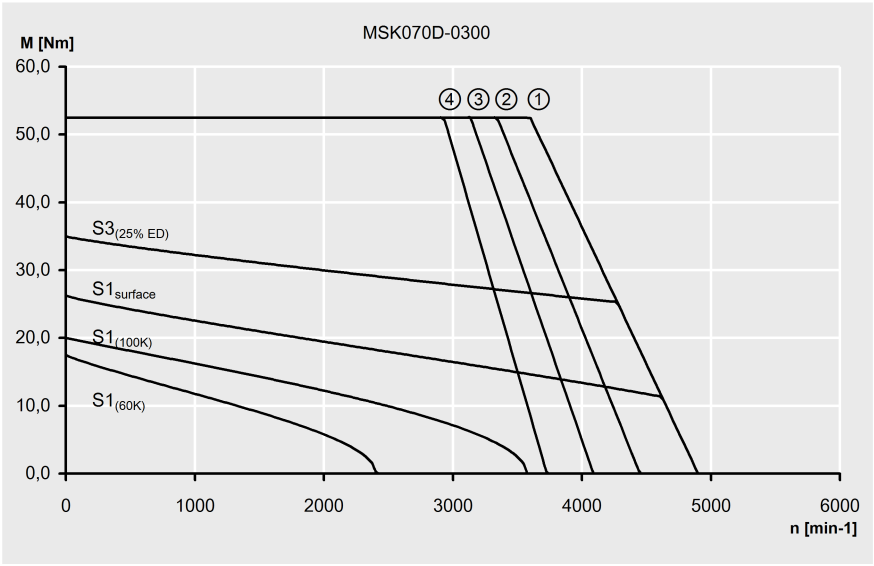

Fig. 4-28: Characteristic curves of an MSK070D-0300 motor

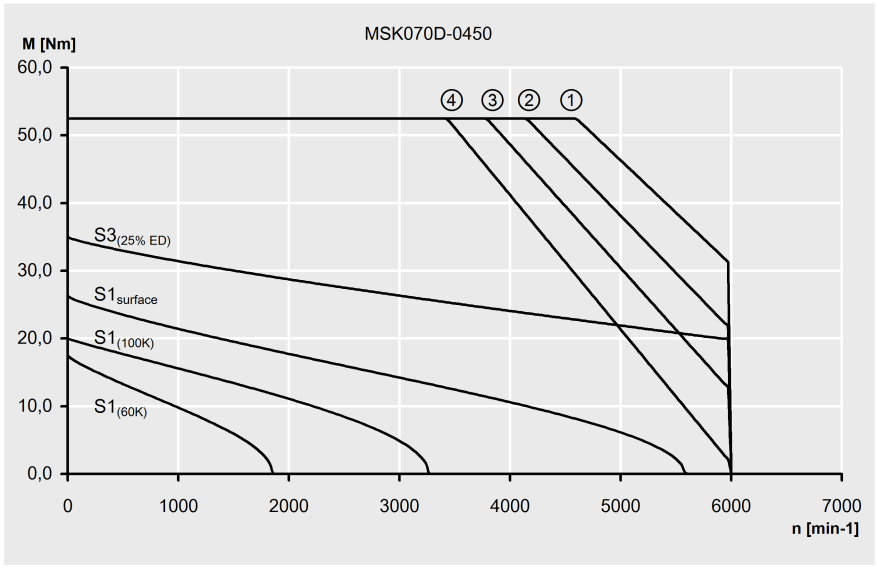

Fig. 4-29: Characteristic curves of an MSK070D-0450 motor

Technical Data

4.10.3 MSK070E - Technical Data

Designation	Symbol	Unit	MSK070E-0150-NN	MSK070E-0300-NN	MSK070E-0450-NN
Continuous torque at standstill 60 K	M_{0_60}	Nm	23.0		
Continuous current at standstill 60 K	$I_{0_60(rms)}$	A	6.4	15.4	19.3
Continuous torque at standstill 100 K	M_{0_100}	Nm	25.0		
Continuous current at standstill 100 K	$I_{0_100(rms)}$	A	7.0	16.7	21.0
Continuous torque at standstill, surface	M_{0_S}	Nm	34.5		
Continuous current at standstill. surface	$I_{0_S(rms)}$	A	9.6	23.1	29.0
Maximum torque	M_{max}	Nm	70.0	65.0	60.0
Maximum current	$I_{max(rms)}$	A	25.6	49.3	57.9
Torque constant at 20 °C	K_{M_N}	Nm/A	3.94	1.64	1.31
Voltage constant at 20 °C[1)]	K_{EMK_1000}	V/1,000 min-1	242.4	101.0	80.6
Winding resistance at 20 °C	R_{12}	Ohm	3.1	0.53	0.36
Winding inductivity	L_{12}	mH	24.5	3.9	2.7
Discharge capacity of the component	C_{dis}	nF	6.3	3.5	6.7
Number of pole pairs	o	-	6		
Moment of inertia of the rotor	J_{rot}	$kg*m^2$	0.00458		
Thermal time constant	T_{th_nom}	min	32.0		
Maximum velocity	n_{max}	min^{-1}	2200	5300	6000
Sound pressure level	L_P	dB[A]	< 75		
Weight [2)]	m	kg	16.2 (17.8)		
Surrounding air temperature during operation	T_{amb}	°C	0 ... 40		
Protection class acc. to EN 60034-5	-	-	IP65		
Thermal class acc. to EN 60034-1	T.CL.	-	155		
Latest amendment: 2014-01-21					

1) Manufacturing tolerance ±5 %
2) (...) Motors with holding brakes 1, 2, ...

Tab. 4-17: MSK - Technical data

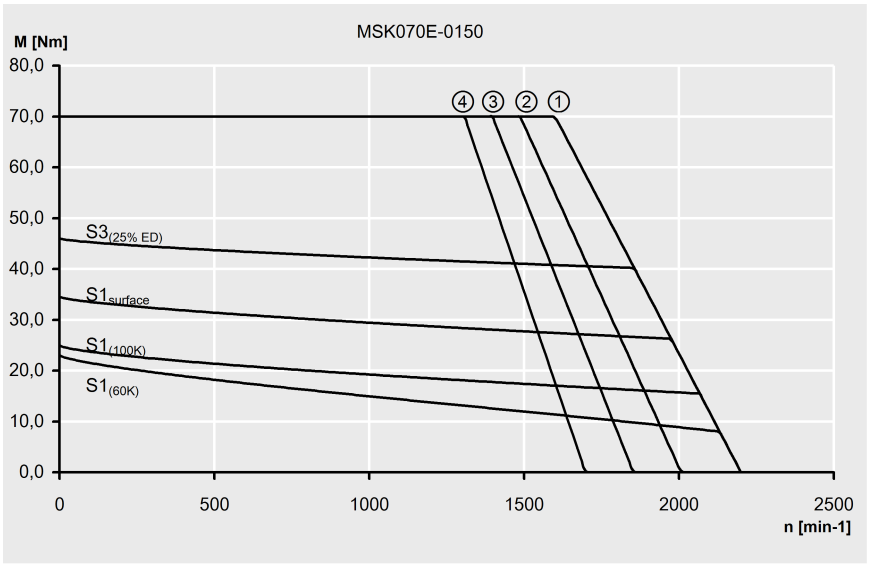

Fig. 4-30: Characteristic curves of an MSK070E-0150 motor

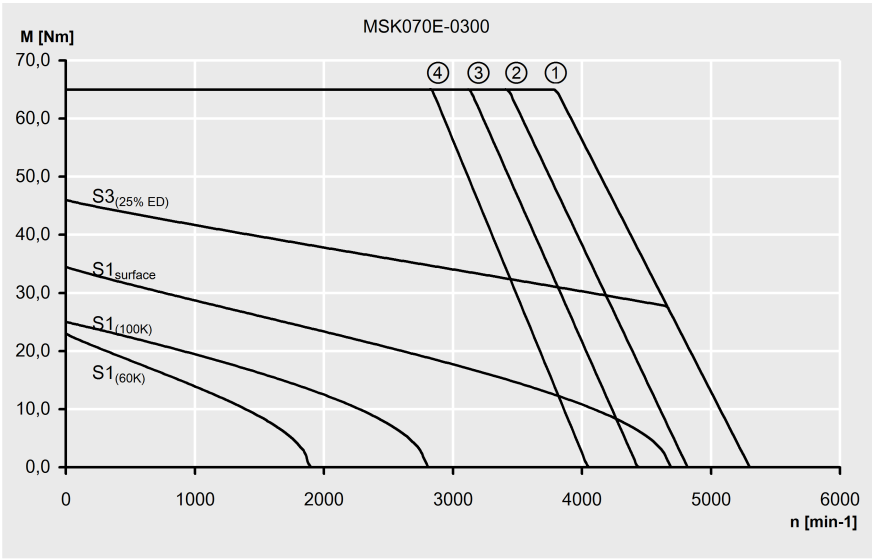

Fig. 4-31: Characteristic curves of an MSK070E-0300 motor

Technical Data

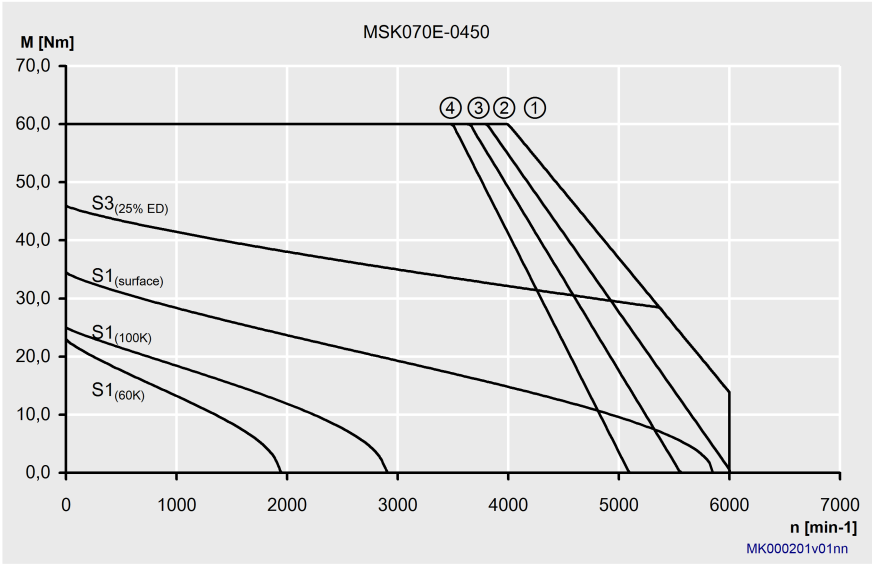

Fig. 4-32: Characteristic curves of an MSK070E-0450 motor

4.11 MSK071

4.11.1 MSK071C - Technical Data

Designation	Symbol	Unit	MSK071C -0200-FN	MSK071C -0200-NN	MSK071C -0300-FN	MSK071C -0300-NN	MSK071C -0450-FN	MSK071C -0450-NN
Continuous torque at standstill 60 K	M_{0_60}	Nm	12.0					
Continuous current at standstill 60 K	$I_{0_60(rms)}$	A	5.2		7.3		8.9	
Continuous torque at standstill 100 K	M_{0_100}	Nm	14.0					
Continuous current at standstill 100 K	$I_{0_100(rms)}$	A	6.1		8.5		10.4	
Continuous torque at standstill. surface	M_{0_S}	Nm	---	18.0	---	18.0	---	18.0
Continuous current at standstill. surface	$I_{0_S(rms)}$	A	---	7.8	---	11.0	---	13.4
Standstill continuous torque liquid	M_{0_L}	Nm	22.8	---	22.8	---	22.8	---
Continuous standstill current liquid	$I_{0_L(rms)}$	A	9.9	---	13.9	---	16.9	---
Maximum torque	M_{max}	Nm	44.0					
Maximum current	$I_{max(rms)}$	A	23.4		32.9		40.1	
Torque constant at 20 °C	K_{M_N}	Nm/A	2.50		1.80		1.49	
Voltage constant at 20 °C[1)]	K_{EMK_1000}	V/1,000 min-1	155.5		110.5		91.3	
Winding resistance at 20 °C	R_{12}	Ohm	3.1		1.68		1.1	
Winding inductivity	L_{12}	mH	19.5		10.9		6.7	
Discharge capacity of the component	C_{dis}	nF	4.6				4.2	
Number of pole pairs	o	-	4					
Moment of inertia of the rotor	J_{rot}	kg*m^2	0.00173					
Thermal time constant	T_{th_nom}	min	3.0	28.0	3.0	28.0	3.0	28.0
Maximum velocity	n_{max}	min^{-1}	3500		5000		5800	
Sound pressure level	L_P	dB[A]	< 75					
Weight [2)]	m	kg	13.9 (15.8)					
Surrounding air temperature during operation	T_{amb}	°C	0 ... 40					
Protection class acc. to EN 60034-5	-	-	IP65					
Thermal class acc. to EN 60034-1	T.CL.	-	155					
Data liquid cooling								
Power loss to be dissipated	P_V	kW	0.75	---	0.75	---	0.75	---
Coolant inlet temperature	T_{in}	°C	10 ... 40	---	10 ... 40	---	10 ... 40	---
Allowed coolant temperature rise at P_V	ΔT_{max}	K	10	---	10	---	10	---
Necessary coolant flow at P_V	Q_{min}	l/min	1.1	---	1.1	---	1.1	---
Pressure loss at Q_{min}	Δp	bar	0.3	---	0.3	---	0.3	---
Maximum allowed inlet pressure	p_{max}	bar	6.0	---	6.0	---	6.0	---
Volume of coolant duct	V_{cool}	u	0.04	---	0.04	---	0.04	---
Material coolant duct			Aluminum pressure casting					
Latest amendment: 2014-01-21								

1) Manufacturing tolerance ±5 %

Technical Data

2) (...) Motors with holding brakes 1, 2, ...

Tab. 4-18: MSK - Technical data

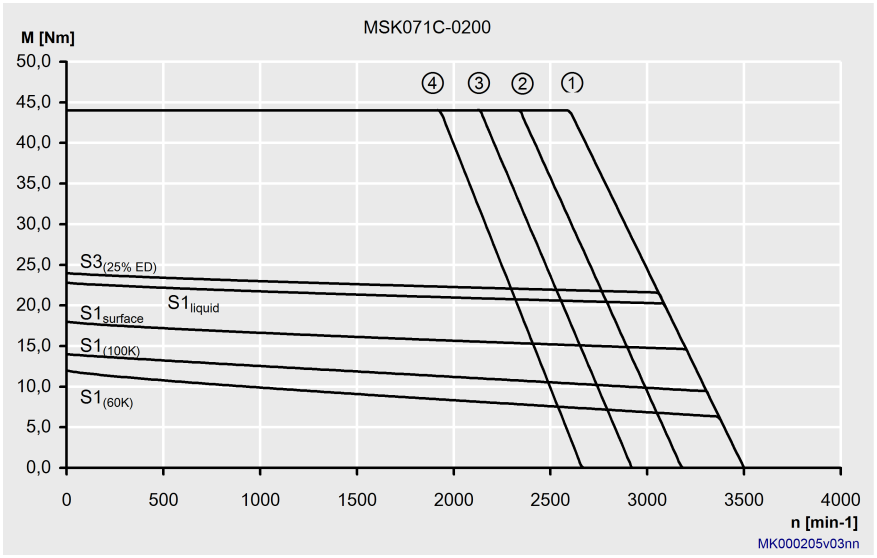

Fig. 4-33: Characteristic curves of an MSK071C-0200 motor

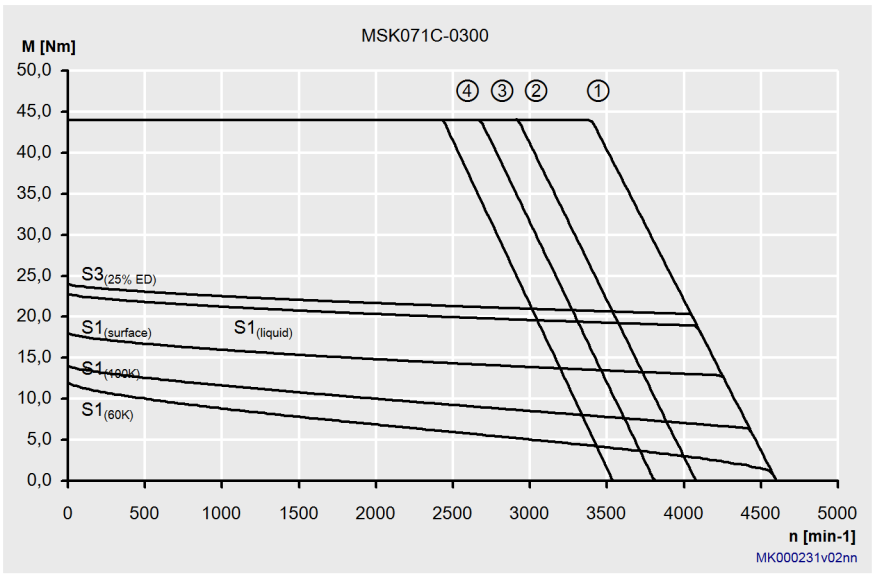

Fig. 4-34: Characteristic curves of an MSK071C-0300 motor

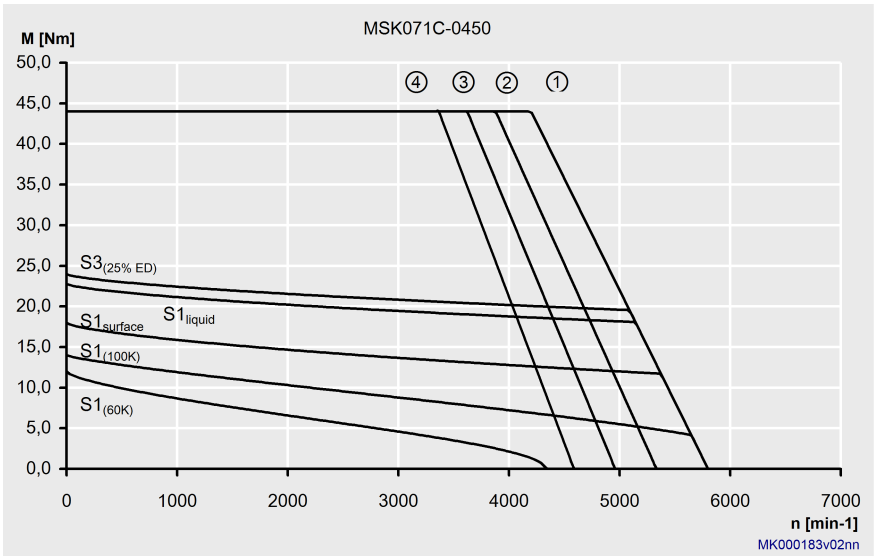

Fig. 4-35: Characteristic curves of an MSK071C-0450 motor

Technical Data

4.11.2 MSK071D - Technical Data

Designation	Symbol	Unit	MSK071D -0200-FN	MSK071D -0200-NN	MSK071D -0300-FN	MSK071D -0300-NN	MSK071D -0450-FN	MSK071D -0450-NN
Continuous torque at standstill 60 K	M_{0_60}	Nm	17.5					
Continuous current at standstill 60 K	$I_{0_60(rms)}$	A	7.3		9.1		15.4	
Continuous torque at standstill 100 K	M_{0_100}	Nm	20.0					
Continuous current at standstill 100 K	$I_{0_100(rms)}$	A	8.6		10.7		17.6	
Continuous torque at standstill, surface	M_{0_S}	Nm	---	26.3	---	26.3	---	26.3
Continuous current at standstill. surface	$I_{0_S(rms)}$	A	---	11.0	---	13.5	---	23.1
Standstill continuous torque liquid	M_{0_L}	Nm	33.3	---	33.3	---	33.3	---
Continuous standstill current liquid	$I_{0_L(rms)}$	A	13.9	---	17.2	---	30.3	---
Maximum torque	M_{max}	Nm	66.0					
Maximum current	$I_{max(rms)}$	A	32.8		40.5		69.3	
Torque constant at 20 °C	K_{M_N}	Nm/A	2.63		2.12		1.25	
Voltage constant at 20 °C[1)]	K_{EMK_1000}	V/1,000 min-1	162.0		134.0		77.1	
Winding resistance at 20 °C	R_{12}	Ohm	1.9		1.26		0.45	
Winding inductivity	L_{12}	mH	14.2		10.7		3.2	
Discharge capacity of the component	C_{dis}	nF	6.9		7.2		7.8	
Number of pole pairs	o	-	4					
Moment of inertia of the rotor	J_{rot}	kg*m²	0.00230					
Thermal time constant	T_{th_nom}	min	6.0	54.0	6.0	54.0	6.0	52.0
Maximum velocity	n_{max}	min^{-1}	3200		3800		6000	
Sound pressure level	L_P	dB[A]	< 75					
Weight [2)]	m	kg	18.0 (19.6)					
Surrounding air temperature during operation	T_{amb}	°C	0 ... 40					
Protection class acc. to EN 60034-5	-	-	IP65					
Thermal class acc. to EN 60034-1	T.CL.	-	155					
Data liquid cooling								
Power loss to be dissipated	P_V	kW	0.90	---	0.90	---	0.90	---
Coolant inlet temperature	T_{in}	°C	10 ... 40	---	10 ... 40	---	10 ... 40	---
Allowed coolant temperature rise at P_V	ΔT_{max}	K	10	---	10	---	10	---
Necessary coolant flow at P_V	Q_{min}	l/min	1.3	---	1.3	---	1.3	---
Pressure loss at Q_{min}	Δp	bar	0.4	---	0.4	---	0.4	---
Maximum allowed inlet pressure	p_{max}	bar	6.0	---	6.0	---	6.0	---
Volume of coolant duct	V_{cool}	u	0.05	---	0.05	---	0.05	---
Material coolant duct			Aluminum pressure casting					
Latest amendment: 2014-01-21								

1) Manufacturing tolerance ±5 %
2) (...) Motors with holding brakes 1, 2. ...

Tab. 4-19: MSK - Technical data

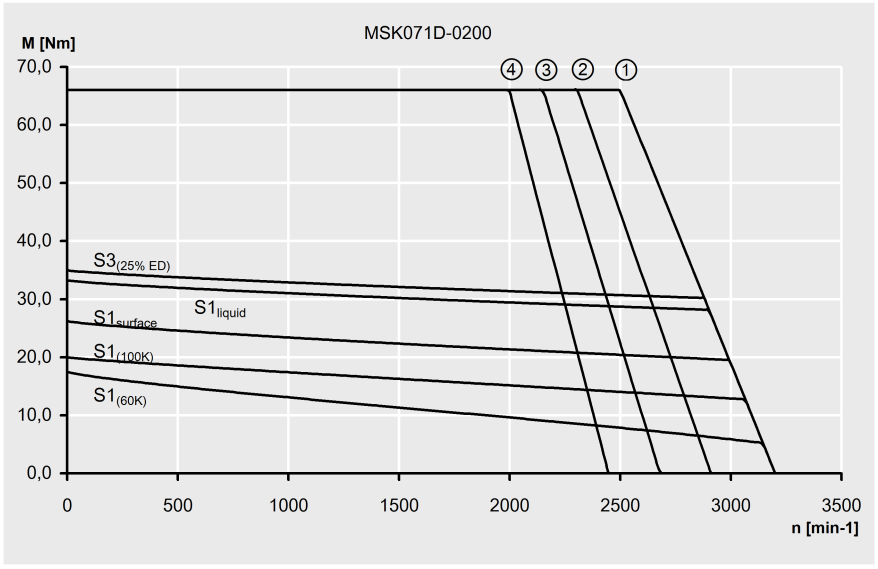

Fig. 4-36: Characteristic curves of an MSK071D-0200 motor

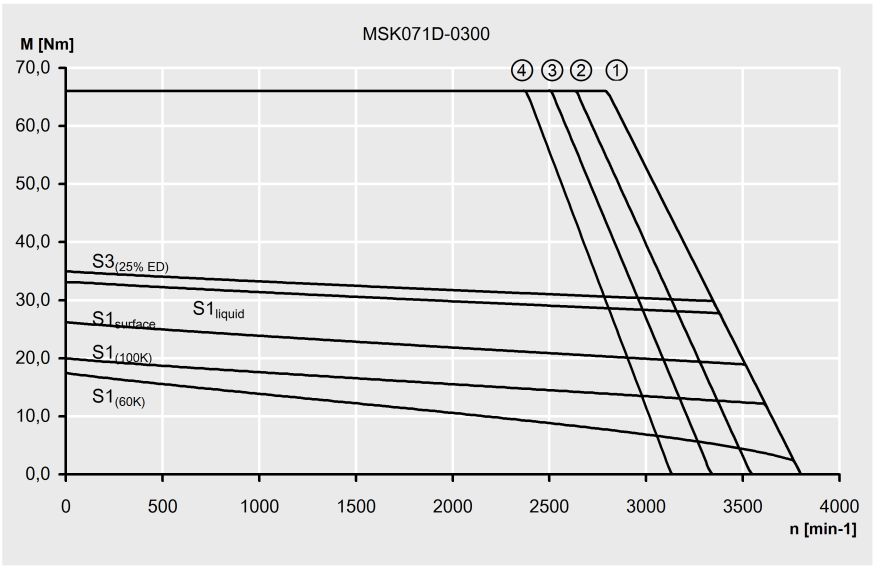

Fig. 4-37: Characteristic curves of an MSK071D-0300 motor

Technical Data

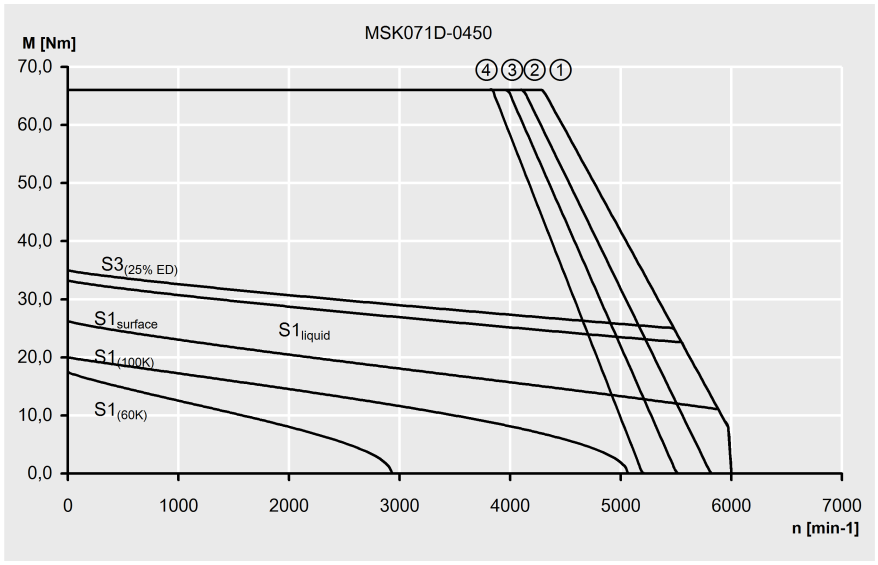

Fig. 4-38: Characteristic curves of an MSK071D-0450 motor

4.11.3 MSK071E - Technical Data

Designation	Symbol	Unit	MSK071E -0200-FN	MSK071E -0200-NN	MSK071E -0300-FN	MSK071E -0300-NN	MSK071E -0450-FN	MSK071E -0450-NN
Continuous torque at standstill 60 K	M_{0_60}	Nm	23.0					
Continuous current at standstill 60 K	$I_{0_60(rms)}$	A	10.1		12.5		20.0	
Continuous torque at standstill 100 K	M_{0_100}	Nm	28.0					
Continuous current at standstill 100 K	$I_{0_100(rms)}$	A	12.6		15.2		24.4	
Continuous torque at standstill. surface	M_{0_S}	Nm	---	34.5	---	34.5	---	34.5
Continuous current at standstill. surface	$I_{0_S(rms)}$	A	---	15.2	---	18.8	---	30.0
Standstill continuous torque liquid	M_{0_L}	Nm	43.7	---	43.7	---	43.7	---
Continuous standstill current liquid	$I_{0_L(rms)}$	A	19.0	---	24.9	---	38.0	---
Maximum torque	M_{max}	Nm	84.0					
Maximum current	$I_{max(rms)}$	A	45.5		56.3		90.1	
Torque constant at 20 °C	K_{M_N}	Nm/A	2.51		2.05		1.29	
Voltage constant at 20 °C[1)]	K_{EMK_1000}	V/1,000 min-1	154.6		126.4		82.7	
Winding resistance at 20 °C	R_{12}	Ohm	1.16		0.79		0.32	
Winding inductivity	L_{12}	mH	9.15		5.9		2.6	
Discharge capacity of the component	C_{dis}	nF	8.9		9.3		9.5	
Number of pole pairs	o	-	4					
Moment of inertia of the rotor	J_{rot}	kg*m²	0.00290					
Thermal time constant	T_{th_nom}	min	8.0	55.0	8.0	55.0	8.0	55.0
Maximum velocity	n_{max}	min-1	3400		4200		6000	
Sound pressure level	L_P	dB[A]	< 75					
Weight [2)]	m	kg	23.5 (25.1)					
Surrounding air temperature during operation	T_{amb}	°C	0 ... 40					
Protection class acc. to EN 60034-5	-	-	IP65					
Thermal class acc. to EN 60034-1	T.CL.	-	155					
Data liquid cooling								
Power loss to be dissipated	P_V	kW	1.00	---	1.00	---	1.00	---
Coolant inlet temperature	T_{in}	°C	10 ... 40	---	10 ... 40	---	10 ... 40	---
Allowed coolant temperature rise at P_V	ΔT_{max}	K	10	---	10	---	10	---
Necessary coolant flow at P_V	Q_{min}	l/min	1.5	---	1.5	---	1.5	---
Pressure loss at Q_{min}	Δp	bar	0.5	---	0.5	---	0.5	---
Maximum allowed inlet pressure	p_{max}	bar	6.0	---	6.0	---	6.0	---
Volume of coolant duct	V_{cool}	u	0.06	---	0.06	---	0.06	---
Material coolant duct			Aluminum pressure casting					
								Latest amendment: 2014-01-21

1) Manufacturing tolerance ±5 %
2) (...) Motors with holding brakes 1, 2, ...

Tab. 4-20: MSK - Technical data

Technical Data

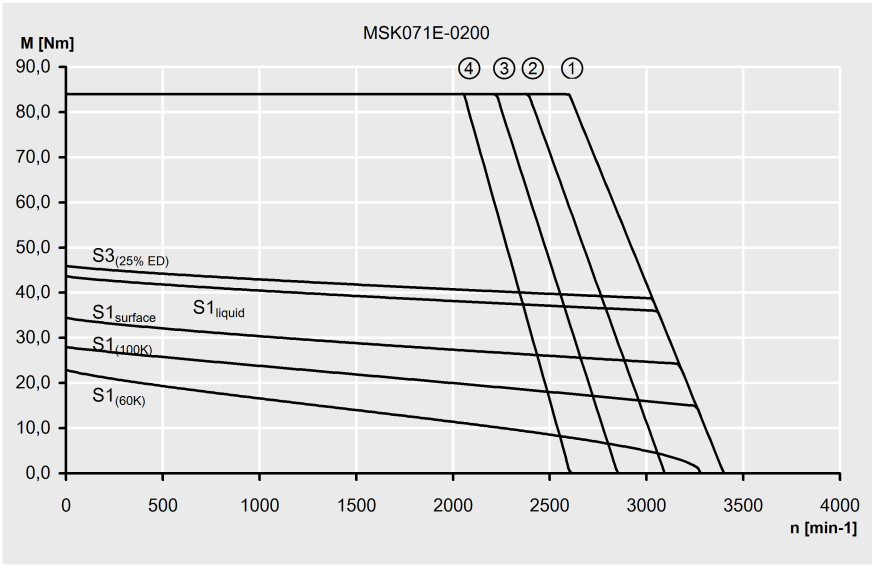

Fig. 4-39: Characteristic curves of an MSK071E-0200 motor

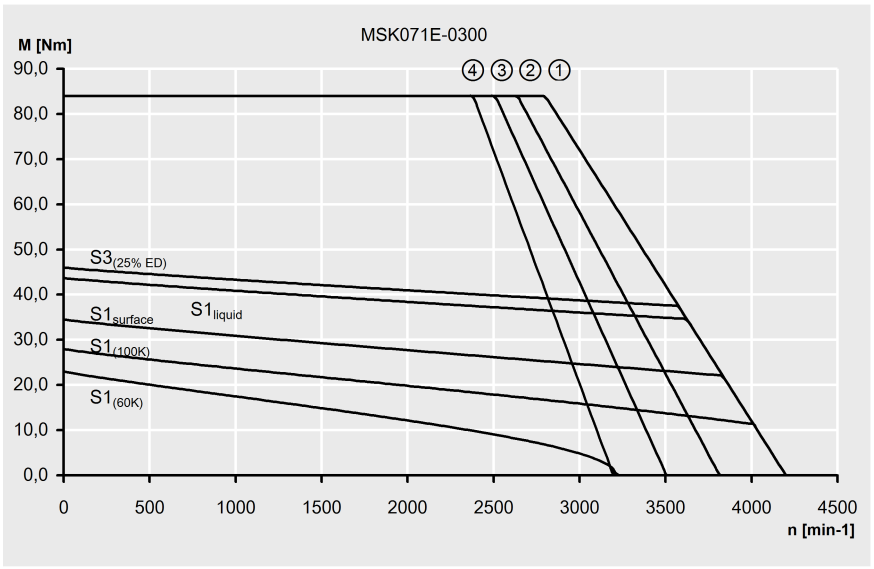

Fig. 4-40: Characteristic curves of an MSK071E-0300 motor

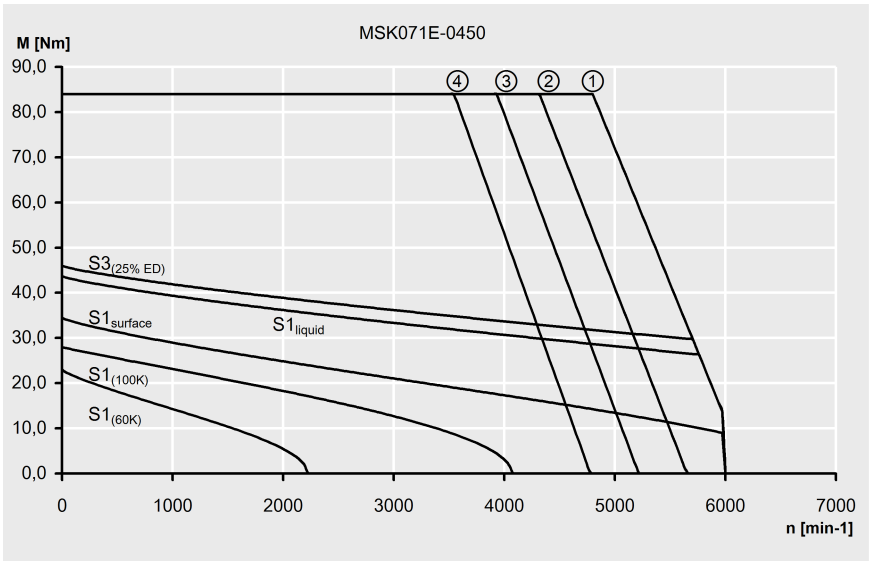

Fig. 4-41: Characteristic curves of an MSK071E-0450 motor

Technical Data

4.12 MSK075

4.12.1 MSK075C Technical Data

Designation	Symbol	Unit	MSK075C-0200-NN	MSK075C-0300-NN	MSK075C-0450-NN
Continuous torque at standstill 60 K	M_{0_60}	Nm	12.0		
Continuous current at standstill 60 K	$I_{0_60(rms)}$	A	6.3	8.4	12.6
Continuous torque at standstill 100 K	M_{0_100}	Nm	12.5		
Continuous current at standstill 100 K	$I_{0_100(rms)}$	A	7.3	8.8	13.1
Continuous torque at standstill. surface	M_{0_S}	Nm	18.0		
Continuous current at standstill. surface	$I_{0_S(rms)}$	A	9.5	12.6	18.9
Maximum torque	M_{max}	Nm	44.0		
Maximum current	$I_{max(rms)}$	A	28.4	37.8	56.7
Torque constant at 20 °C	K_{M_N}	Nm/A	2.11	1.58	1.05
Voltage constant at 20 °C[1)]	K_{EMK_1000}	V/1,000 min-1	129.5	97.0	64.8
Winding resistance at 20 °C	R_{12}	Ohm	3	1.6	0.76
Winding inductivity	L_{12}	mH	16.6	8.8	4.2
Discharge capacity of the component	C_{dis}	nF	3.8	3.2	3.5
Number of pole pairs	o	-	4		
Moment of inertia of the rotor	J_{rot}	kg*m^2	0.00352		
Thermal time constant	T_{th_nom}	min	29.0		17.5
Maximum velocity	n_{max}	min^{-1}	4100	5000	6000
Sound pressure level	L_P	dB[A]	< 75		
Weight [2)]	m	kg	14.8(16.4)		
Surrounding air temperature during operation	T_{amb}	°C	0 ... 40		
Protection class acc. to EN 60034-5	-	-	IP65		
Thermal class acc. to EN 60034-1	T.CL.	-	155		
Latest amendment: 2014-01-21					

1) Manufacturing tolerance ±5 %
2) (...) Motors with holding brakes 1, 2, ...

Tab. 4-21: MSK - Technical data

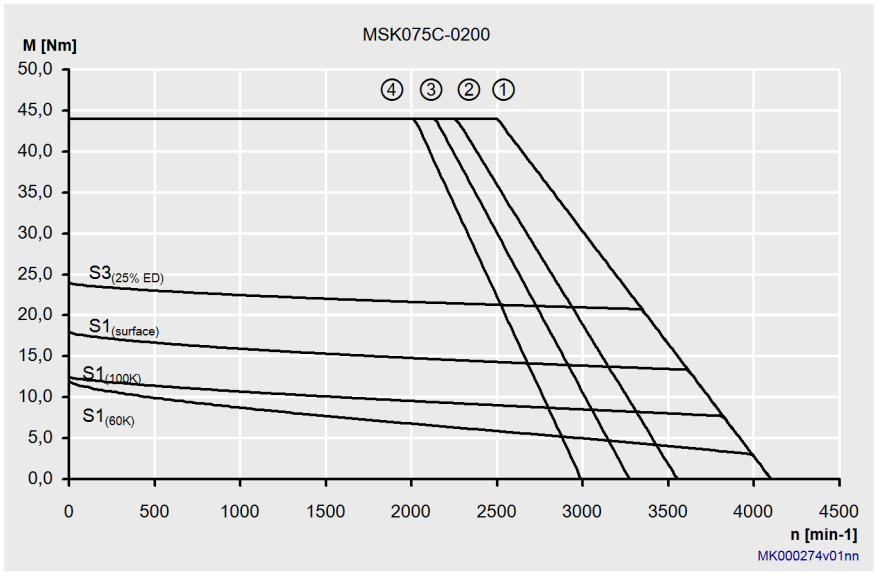

Fig. 4-42: Motor characteristic curve MSK075C-0200

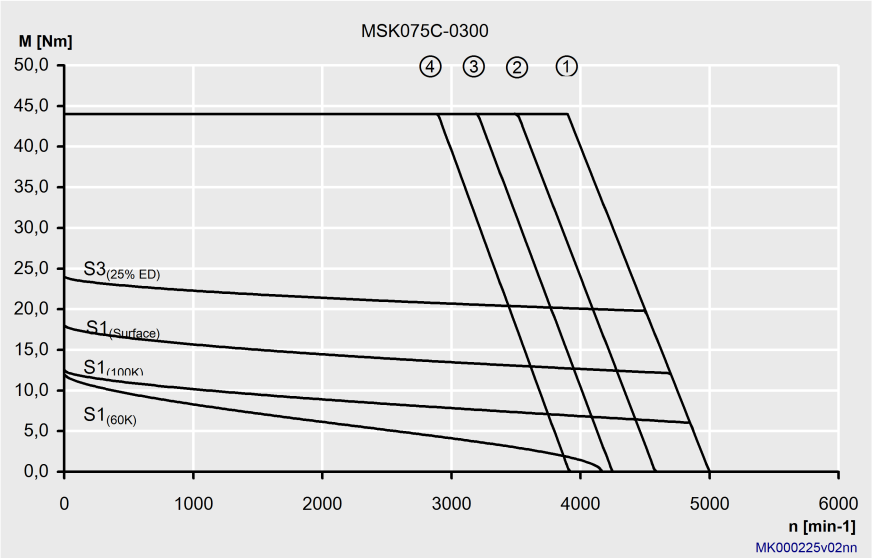

Fig. 4-43: Motor characteristic curve MSK075C-300

Technical Data

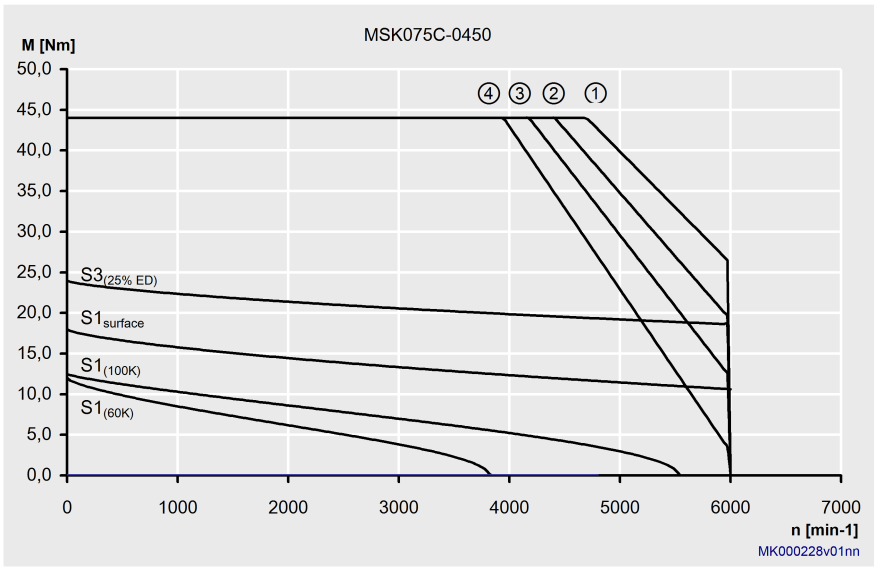

Fig. 4-44: Motor characteristic curve MSK075C-0450

4.12.2 MSK075D Technical Data

Designation	Symbol	Unit	MSK075D-0200-NN	MSK075D-0300-NN	MSK075D-0450-NN
Continuous torque at standstill 60 K	M_{0_60}	Nm	17.0		
Continuous current at standstill 60 K	$I_{0_60(rms)}$	A	8.3	11.7	16.5
Continuous torque at standstill 100 K	M_{0_100}	Nm	18.5		
Continuous current at standstill 100 K	$I_{0_100(rms)}$	A	9.0	12.7	18.0
Continuous torque at standstill. surface	M_{0_S}	Nm	25.5		
Continuous current at standstill. surface	$I_{0_S(rms)}$	A	12.5	17.6	24.8
Maximum torque	M_{max}	Nm	64.0	66.0	64.0
Maximum current	$I_{max(rms)}$	A	37.4	52.7	74.3
Torque constant at 20 °C	K_{M_N}	Nm/A	2.24	1.60	1.13
Voltage constant at 20 °C[1)]	K_{EMK_1000}	V/1,000 min-1	138.0	98.2	69.3
Winding resistance at 20 °C	R_{12}	Ohm	1.8	0.91	0.45
Winding inductivity	L_{12}	mH	11.7	5.7	2.9
Discharge capacity of the component	C_{dis}	nF	4.6	4.7	
Number of pole pairs	o	-	4		
Moment of inertia of the rotor	J_{rot}	kg*m^2	0.00490		
Thermal time constant	T_{th_nom}	min	22.0	17.5	22.0
Maximum velocity	n_{max}	min^{-1}	3800	4800	6000
Sound pressure level	L_P	dB[A]	< 75		
Weight [2)]	m	kg	19.0 (20.1)		
Surrounding air temperature during operation	T_{amb}	°C	0 ... 40		
Protection class acc. to EN 60034-5	-	-	IP65		
Thermal class acc. to EN 60034-1	T.CL.	-	155		
Latest amendment: 2014-01-21					

1) Manufacturing tolerance ±5 %
2) (...) Motors with holding brakes 1, 2, ...

Tab. 4-22: MSK - Technical data

Technical Data

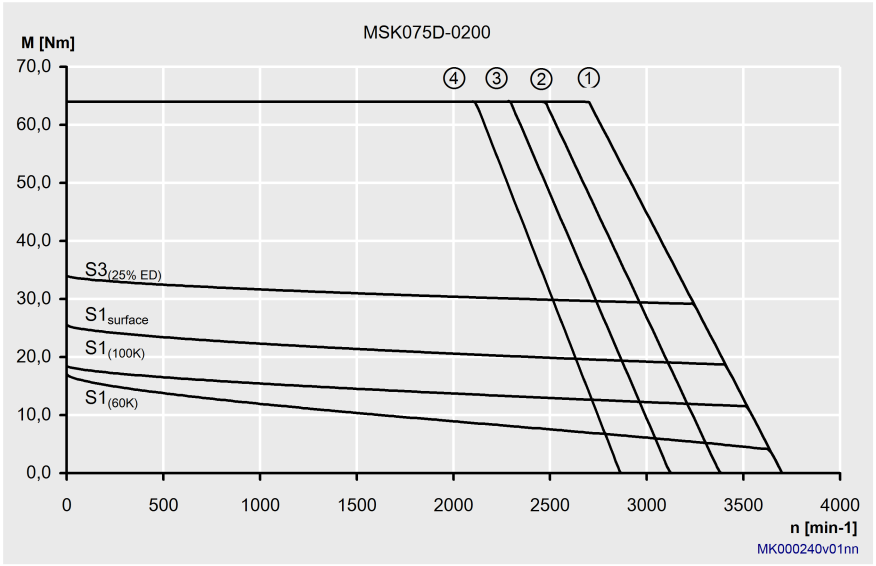

Fig. 4-45: Motor characteristic curve MSK075D-0200

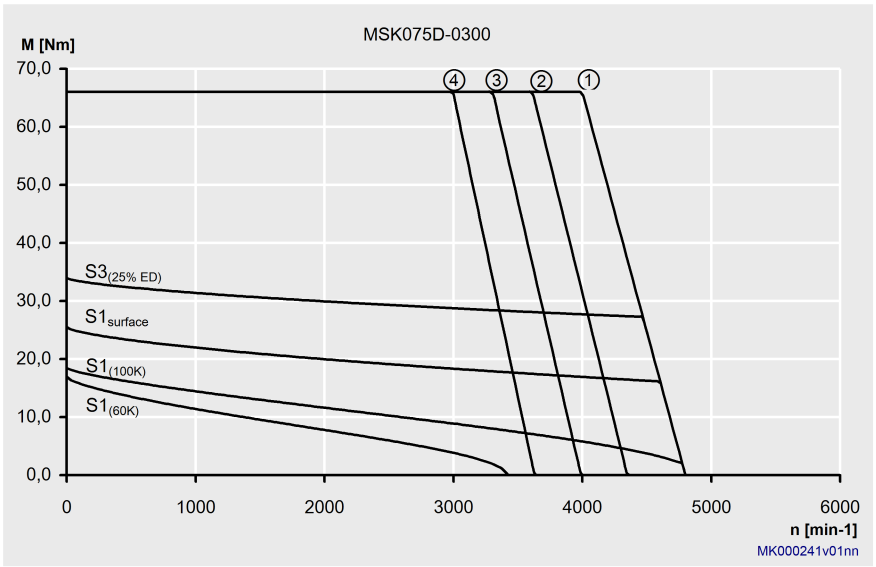

Fig. 4-46: Motor characteristic curve MSK075D-0300

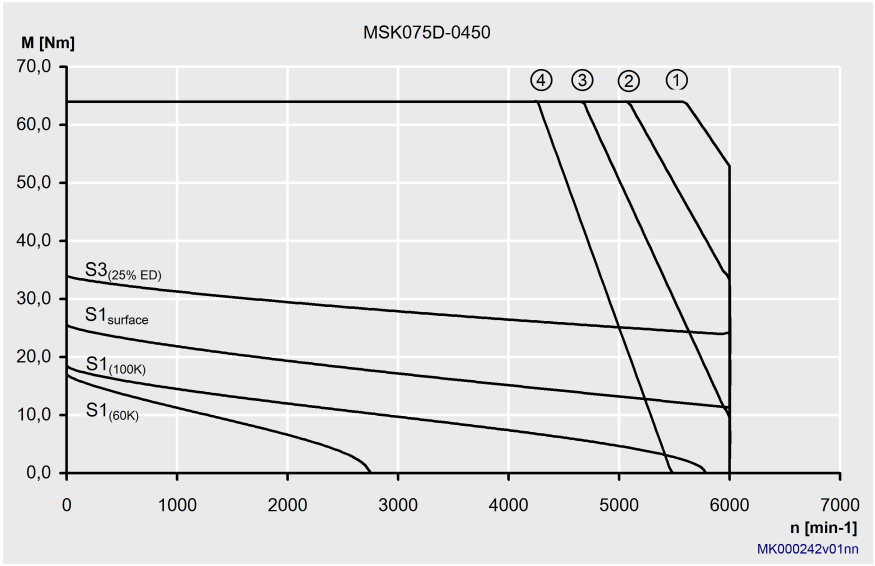

Fig. 4-47: Motor characteristic curve MSK075D-0450

Technical Data

4.12.3 MSK075E Technical Data

Designation	Symbol	Unit	MSK075E-0200-NN	MSK075E-0300-FN	MSK075E-0300-NN	MSK075E-0450-FN	MSK075E-0450-NN
Continuous torque at standstill 60 K	M_{0_60}	Nm	21.0				
Continuous current at standstill 60 K	$I_{0_60(rms)}$	A	10.2	14.2		18.6	
Continuous torque at standstill 100 K	M_{0_100}	Nm	23.0				
Continuous current at standstill 100 K	$I_{0_100(rms)}$	A	11.2	15.6		20.4	
Continuous torque at standstill. surface	M_{0_S}	Nm	31.5	---	31.5	---	31.5
Continuous current at standstill. surface	$I_{0_S(rms)}$	A	15.3	---	21.3	---	27.9
Standstill continuous torque liquid	M_{0_L}	Nm	---	39.9	---	39.9	---
Continuous standstill current liquid	$I_{0_L(rms)}$	A	---	27.0	---	35.3	---
Maximum torque	M_{max}	Nm	88.0				
Maximum current	$I_{max(rms)}$	A	45.9	63.9		83.7	
Torque constant at 20 °C	K_{M_N}	Nm/A	2.26	1.63		1.24	
Voltage constant at 20 °C[1)]	K_{EMK_1000}	V/1,000 min-1	139.0	100.0		76.5	
Winding resistance at 20 °C	R_{12}	Ohm	1.24	0.65		0.39	
Winding inductivity	L_{12}	mH	8.4	4.46		2.7	
Discharge capacity of the component	C_{dis}	nF	5.8	6.5		5.6	
Number of pole pairs	o	-	4				
Moment of inertia of the rotor	J_{rot}	kg*m²	0.00613				
Thermal time constant	T_{th_nom}	min	29.0	10.0	29.0	10.0	29.0
Maximum velocity	n_{max}	min^{-1}	3850	5200		6000	
Sound pressure level	L_P	dB[A]	< 75				
Weight [2)]	m	kg	22.5 (23.6) (24.1)				
Surrounding air temperature during operation	T_{amb}	°C	0 ... 40				
Protection class acc. to EN 60034-5	-	-	IP65				
Thermal class acc. to EN 60034-1	T.CL.	-	155				
Data liquid cooling							
Power loss to be dissipated	P_V	kW	---	1.00	---	1.00	---
Coolant inlet temperature	T_{in}	°C	---	10 ... 40	---	10 ... 40	---
Allowed coolant temperature rise at P_V	ΔT_{max}	K	---	10	---	10	---
Necessary coolant flow at P_V	Q_{min}	l/min	---	1.5	---	1.5	---
Pressure loss at Q_{min}	Δp	bar	---	0.5	---	0.5	---
Maximum allowed inlet pressure	p_{max}	bar	---	6.0	---	6.0	---
Volume of coolant duct	V_{cool}	u	---	0.06	---	0.06	---
Material coolant duct			Aluminum pressure casting				
							Latest amendment: 2014-01-21

1) Manufacturing tolerance ±5 %
2) (...) Motors with holding brakes 1, 2, ...

Tab. 4-23: MSK - Technical data

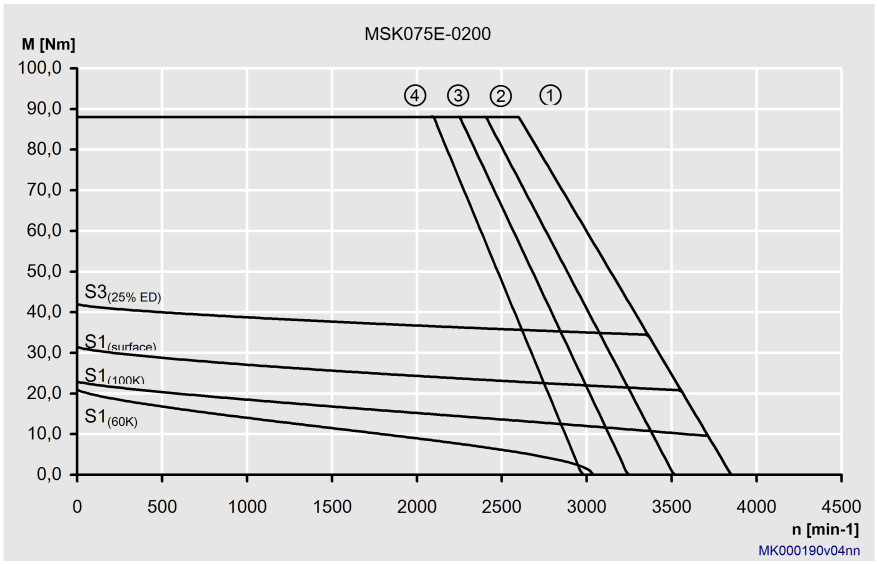

Fig. 4-48: Motor characteristic curve MSK075E-0200

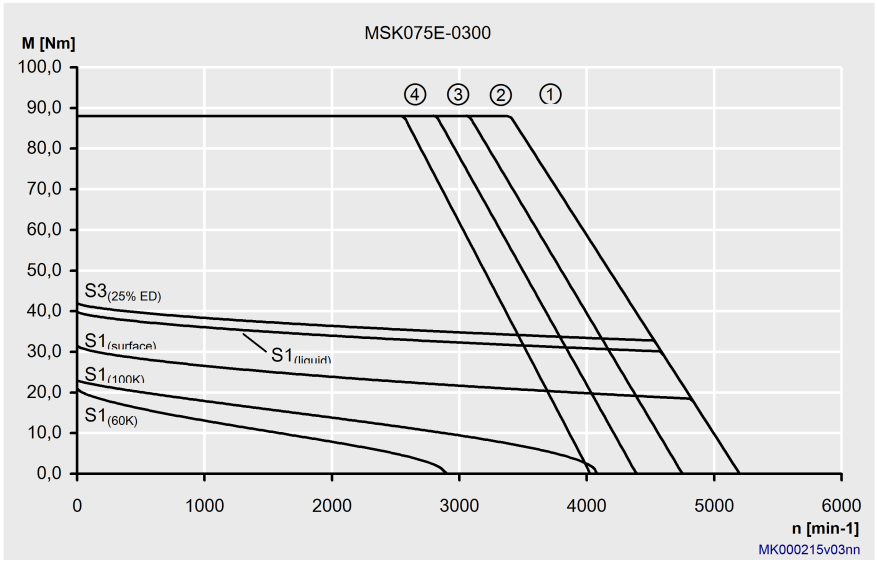

Fig. 4-49: Motor characteristic curve MSK075E-300

Technical Data

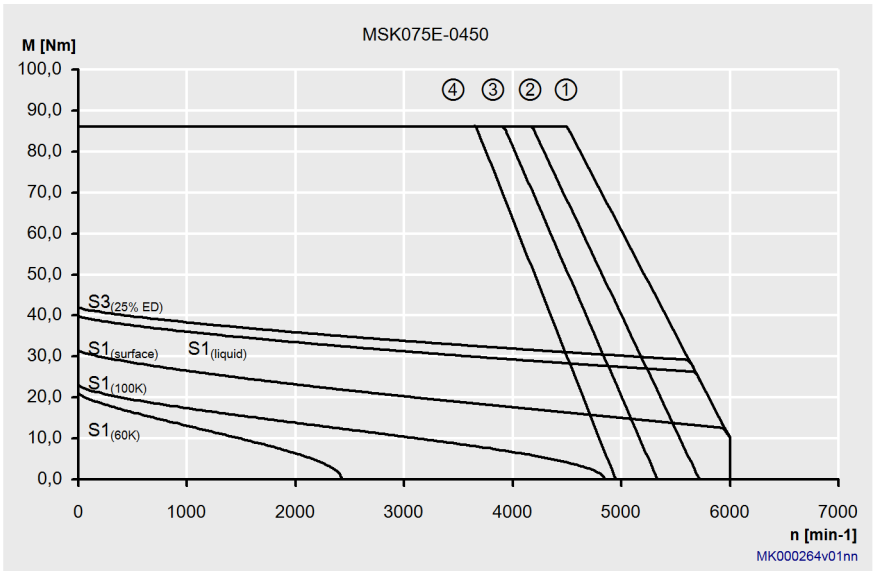

Fig. 4-50: Motor characteristic curve MSK075C-0450

4.13 MSK076

4.13.1 MSK076C - Technical Data

Designation	Symbol	Unit	MSK076C-0300-NN	MSK076C-0450-NN
Continuous torque at standstill 60 K	M_{0_60}	Nm	12.0	
Continuous current at standstill 60 K	$I_{0_60(rms)}$	A	7.2	12.2
Continuous torque at standstill 100 K	M_{0_100}	Nm	13.5	
Continuous current at standstill 100 K	$I_{0_100(rms)}$	A	8.1	13.7
Continuous torque at standstill. surface	M_{0_S}	Nm	18.0	
Continuous current at standstill. surface	$I_{0_S(rms)}$	A	10.8	18.3
Maximum torque	M_{max}	Nm	43.5	
Maximum current	$I_{max(rms)}$	A	32.4	54.9
Torque constant at 20 °C	K_{M_N}	Nm/A	1.84	1.14
Voltage constant at 20 °C[1)]	K_{EMK_1000}	V/1,000 min-1	113.0	70.5
Winding resistance at 20 °C	R_{12}	Ohm	1.85	0.71
Winding inductivity	L_{12}	mH	12.6	4.7
Discharge capacity of the component	C_{dis}	nF	6.5	6.0
Number of pole pairs	o	-	4	
Moment of inertia of the rotor	J_{rot}	kg*m^2	0.00430	
Thermal time constant	T_{th_nom}	min	25.0	
Maximum velocity	n_{max}	min^{-1}	4700	5000
Sound pressure level	L_P	dB[A]	< 75	
Weight [2)]	m	kg	13.8 (14.9)	
Surrounding air temperature during operation	T_{amb}	°C	0 ... 40	
Protection class acc. to EN 60034-5	-	-	IP65	
Thermal class acc. to EN 60034-1	T.CL.	-	155	
				Latest amendment: 2014-01-21

1) Manufacturing tolerance ±5 %
2) (...) Motors with holding brakes 1, 2, ...

Tab. 4-24: MSK - Technical data

Technical Data

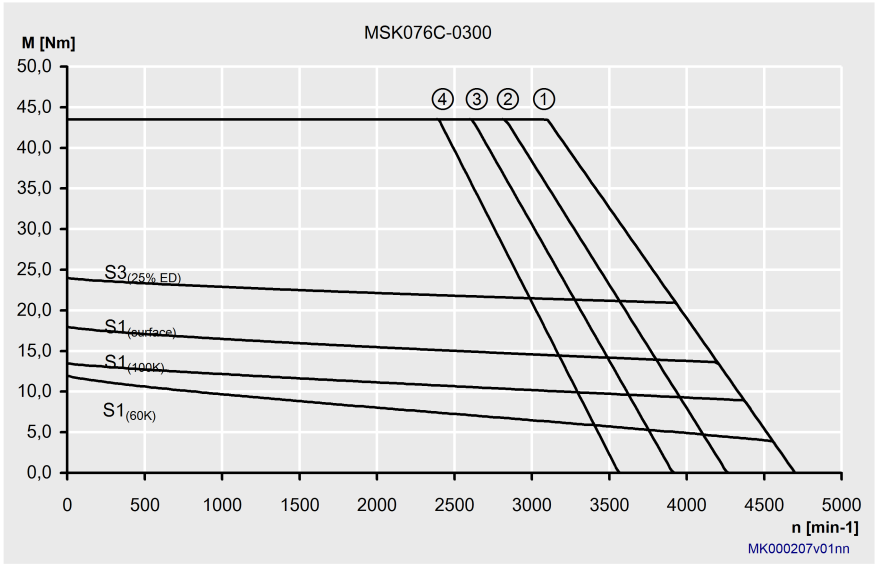

Fig. 4-51: Characteristic curves of an MSK076C-0300 motor

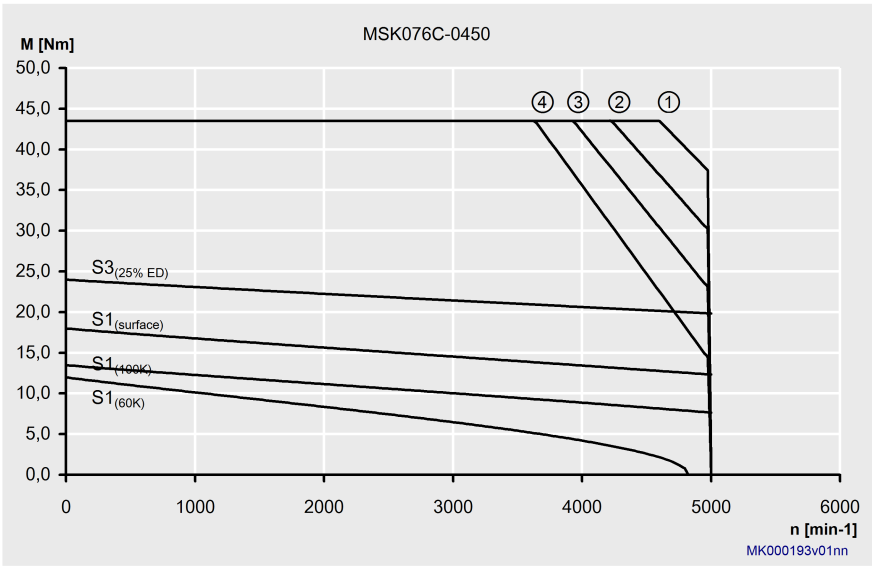

Fig. 4-52: Characteristic curves of an MSK076C-0450 motor

4.14 MSK100

4.14.1 MSK100A - Technical Data

Designation	Symbol	Unit	MSK100A-0200-NN	MSK100A-0300-NN	MSK100A-0450-NN
Continuous torque at standstill 60 K	M_{0_60}	Nm	15.0		
Continuous current at standstill 60 K	$I_{0_60(rms)}$	A	9.2	10.2	12.0
Continuous torque at standstill 100 K	M_{0_100}	Nm	17.0		
Continuous current at standstill 100 K	$I_{0_100(rms)}$	A	10.4	11.6	13.6
Continuous torque at standstill. surface	M_{0_S}	Nm	22.5		
Continuous current at standstill. surface	$I_{0_S(rms)}$	A	13.8	15.3	18.0
Maximum torque	M_{max}	Nm	54.0		
Maximum current	$I_{max(rms)}$	A	41.4	45.9	54.0
Torque constant at 20 °C	K_{M_N}	Nm/A	1.89	1.70	1.45
Voltage constant at 20 °C[1)]	K_{EMK_1000}	V/1,000 min-1	116.4	104.5	89.4
Winding resistance at 20 °C	R_{12}	Ohm	1.45	1.1	0.81
Winding inductivity	L_{12}	mH	13.9	11.2	7.8
Discharge capacity of the component	C_{dis}	nF	4.8	4.6	4.9
Number of pole pairs	o	-	4		
Moment of inertia of the rotor	J_{rot}	kg*m^2	0.01100		
Thermal time constant	T_{th_nom}	min	48.0	39.0	
Maximum velocity	n_{max}	min^{-1}	4400	5200	6000
Sound pressure level	L_P	dB[A]	< 75		
Weight [2)]	m	kg	23.0 (25.4)		
Surrounding air temperature during operation	T_{amb}	°C	0 ... 40		
Protection class acc. to EN 60034-5	-	-	IP65		
Thermal class acc. to EN 60034-1	T.CL.	-	155		
Latest amendment: 2014-01-21					

1) Manufacturing tolerance ±5 %
2) (...) Motors with holding brakes 1, 2, ...

Tab. 4-25: MSK - Technical data

Technical Data

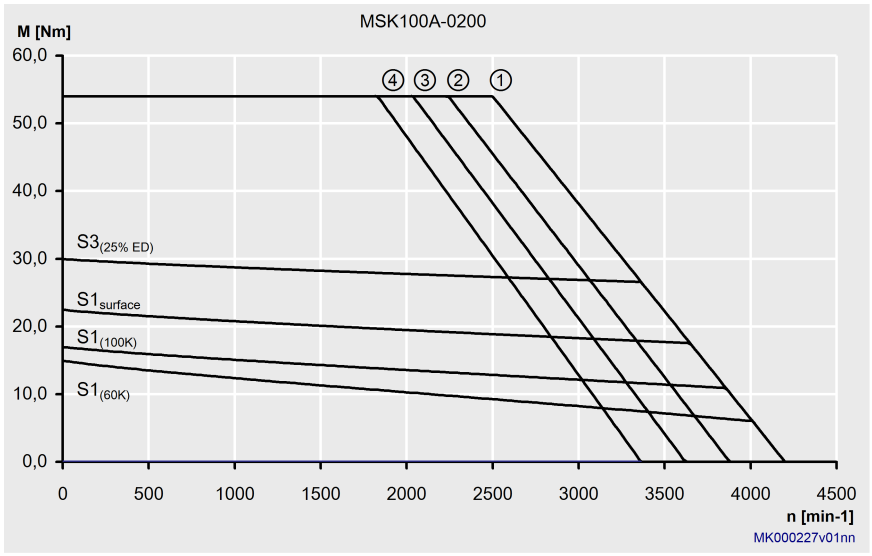

Fig. 4-53: Characteristic curve of a MSK100A-0200 motor

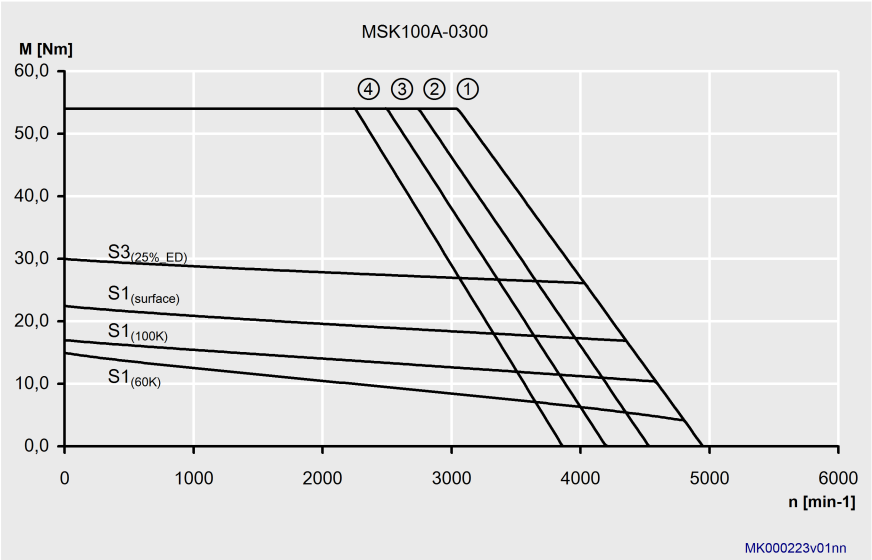

Fig. 4-54: Characteristic curve of a MSK100A-0300 motor

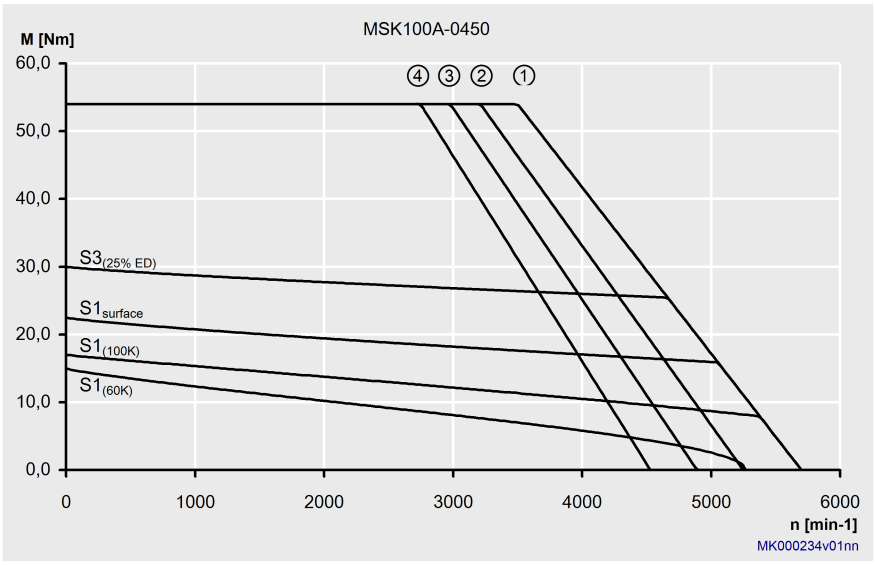

Fig. 4-55: Characteristic curve of a MSK100A-0450 motor

Technical Data

4.14.2 MSK100B - Technical Data

Designation	Symbol	Unit	MSK100B-0200-NN	MSK100B-0300-NN	MSK100B-0400-NN	MSK100B-0450-NN
Continuous torque at standstill 60 K	M_{0_60}	Nm	28.0			
Continuous current at standstill 60 K	$I_{0_60(rms)}$	A	14.7	17.4	24.5	28.5
Continuous torque at standstill 100 K	M_{0_100}	Nm	33.0			
Continuous current at standstill 100 K	$I_{0_100(rms)}$	A	17.3	20.5	29.5	33.6
Continuous torque at standstill. surface	M_{0_S}	Nm	42.0			
Continuous current at standstill. surface	$I_{0_S(rms)}$	A	22.1	26.1	35.6	42.8
Maximum torque	M_{max}	Nm	102.0			
Maximum current	$I_{max(rms)}$	A	66.2	78.3	106.7	110.7
Torque constant at 20 °C	K_{M_N}	Nm/A	2.10	1.77	1.30	1.14
Voltage constant at 20 °C[1)]	K_{EMK_1000}	V/1,000 min-1	129.5	108.5	80.0	70.0
Winding resistance at 20 °C	R_{12}	Ohm	0.58	0.43	0.23	0.17
Winding inductivity	L_{12}	mH	7.6	5.5	3.1	2.2
Discharge capacity of the component	C_{dis}	nF	10.3	9.3	10.3	
Number of pole pairs	o	-	4			
Moment of inertia of the rotor	J_{rot}	kg*m²	0.01920			
Thermal time constant	T_{th_nom}	min	40.0			
Maximum velocity	n_{max}	min-1	4100	4500		
Sound pressure level	L_P	dB[A]	< 75			
Weight [2)]	m	kg	34.0 (36.5) (37.8)			
Surrounding air temperature during operation	T_{amb}	°C	0 ... 40			
Protection class acc. to EN 60034-5	-	-	IP65			
Thermal class acc. to EN 60034-1	T.CL.	-	155			
Latest amendment: 2014-01-21						

1) Manufacturing tolerance ±5 %
2) (...) Motors with holding brakes 1, 2, ...

Tab. 4-26: MSK - Technical data

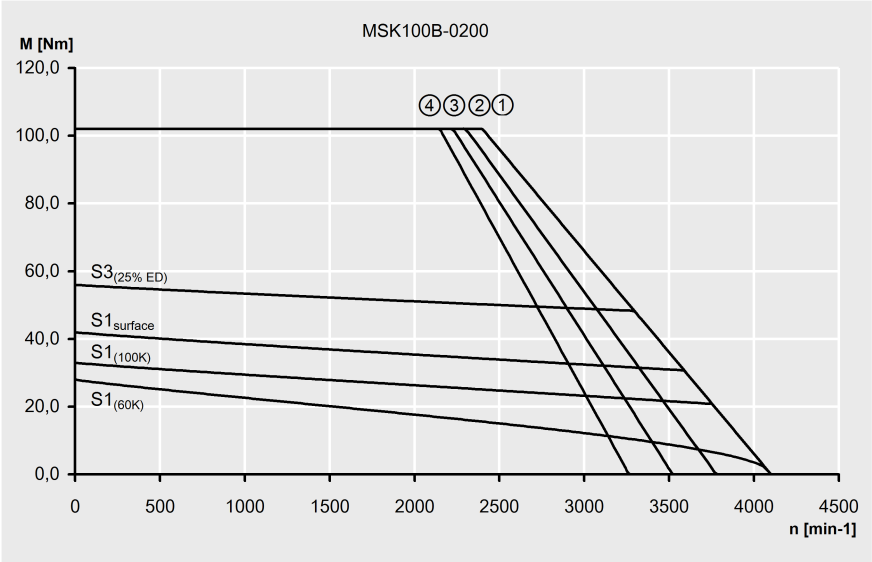

Fig. 4-56: Characteristic curve of a MSK100B-0200 motor

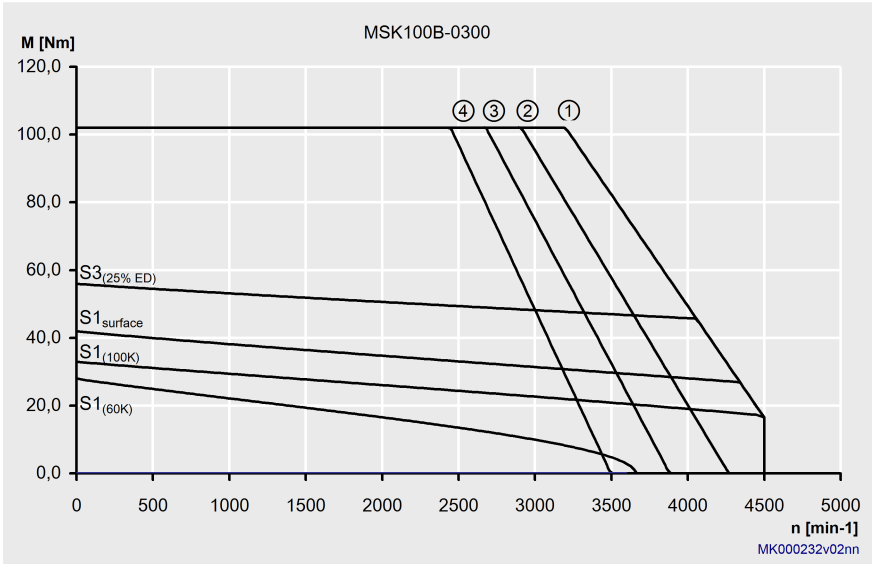

Fig. 4-57: Characteristic curve of a MSK100B-0300 motor

Technical Data

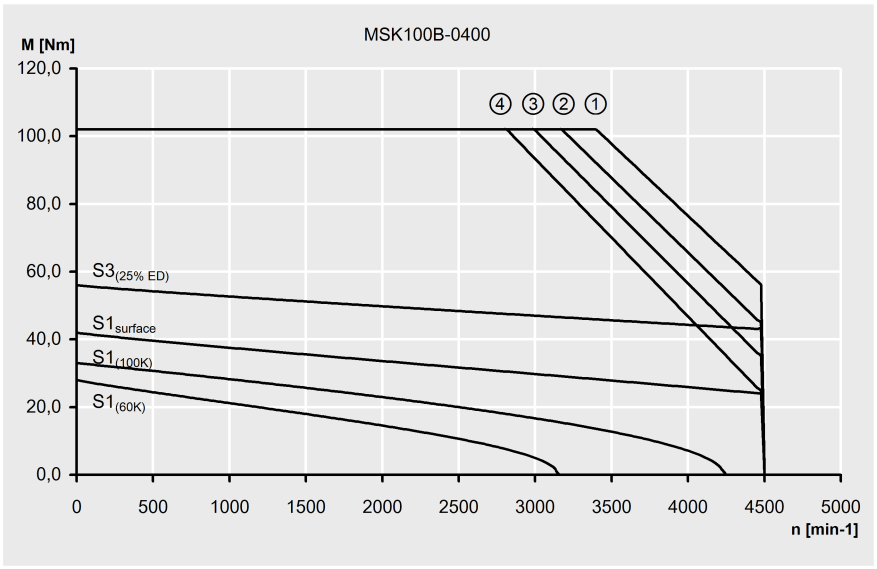

Fig. 4-58: Characteristic curve of a MSK100B-0400 motor

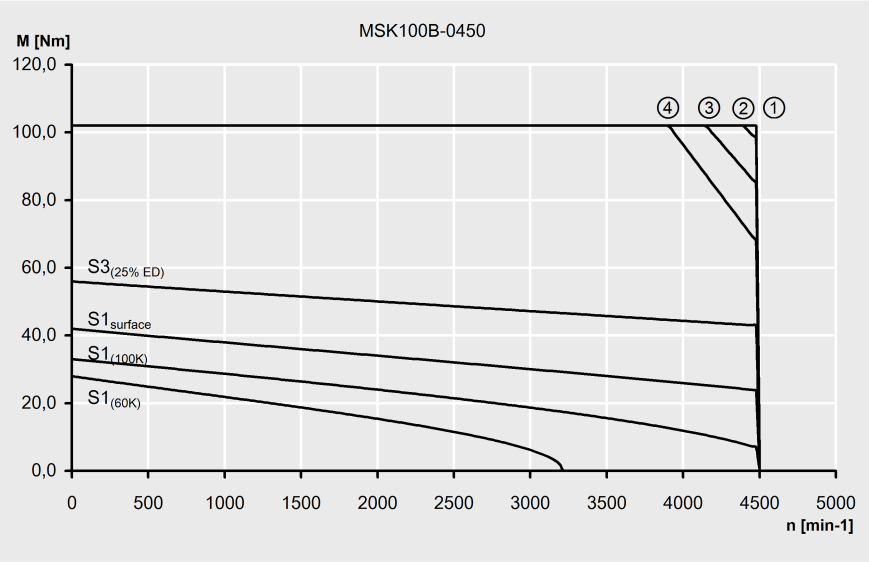

Fig. 4-59: Characteristic curve of a MSK100B-0450 motor

4.14.3 MSK100C - Technical Data

Designation	Symbol	Unit	MSK100C-0200-NN	MSK100C-0300-NN	MSK100C-0450-NN
Continuous torque at standstill 60 K	M_{0_60}	Nm	38.0		
Continuous current at standstill 60 K	$I_{0_60(rms)}$	A	17.7	21.6	35.4
Continuous torque at standstill 100 K	M_{0_100}	Nm	43.5		
Continuous current at standstill 100 K	$I_{0_100(rms)}$	A	20.3	27.0	43.5
Continuous torque at standstill. surface	M_{0_S}	Nm	57.0		
Continuous current at standstill. surface	$I_{0_S(rms)}$	A	26.6	32.4	52.9
Maximum torque	M_{max}	Nm	148.0		
Maximum current	$I_{max(rms)}$	A	79.7	97.2	159.3
Torque constant at 20 °C	K_{M_N}	Nm/A	2.37	1.94	1.18
Voltage constant at 20 °C[1)]	K_{EMK_1000}	V/1,000 min-1	145.5	119.1	72.7
Winding resistance at 20 °C	R_{12}	Ohm	0.46	0.3	0.12
Winding inductivity	L_{12}	mH	6.7	4.2	1.6
Discharge capacity of the component	C_{dis}	nF	12.8	14.3	13.2
Number of pole pairs	o	-	4		
Moment of inertia of the rotor	J_{rot}	kg*m^2	0.02730		
Thermal time constant	T_{th_nom}	min	90.0		
Maximum velocity	n_{max}	min^{-1}	3500	4500	4000
Sound pressure level	L_P	dB[A]	< 75		
Weight [2)]	m	kg	45.1 (48.9)		
Surrounding air temperature during operation	T_{amb}	°C	0 ... 40		
Protection class acc. to EN 60034-5	-	-	IP65		
Thermal class acc. to EN 60034-1	T.CL.	-	155		
Latest amendment: 2014-01-21					

1) Manufacturing tolerance ±5 %
2) (...) Motors with holding brakes 1, 2, ...

Tab. 4-27: MSK - Technical data

Technical Data

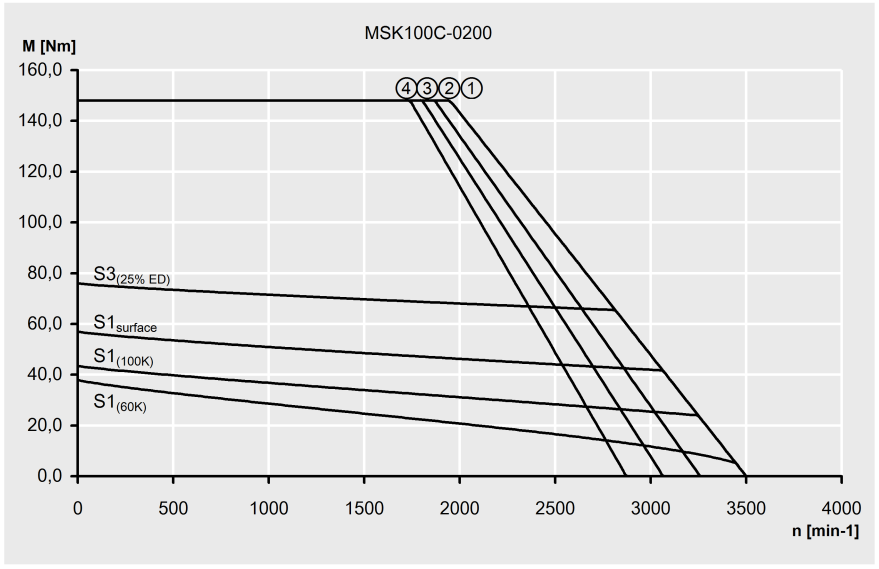

Fig. 4-60: Characteristic curve of a MSK100C-0200 motor

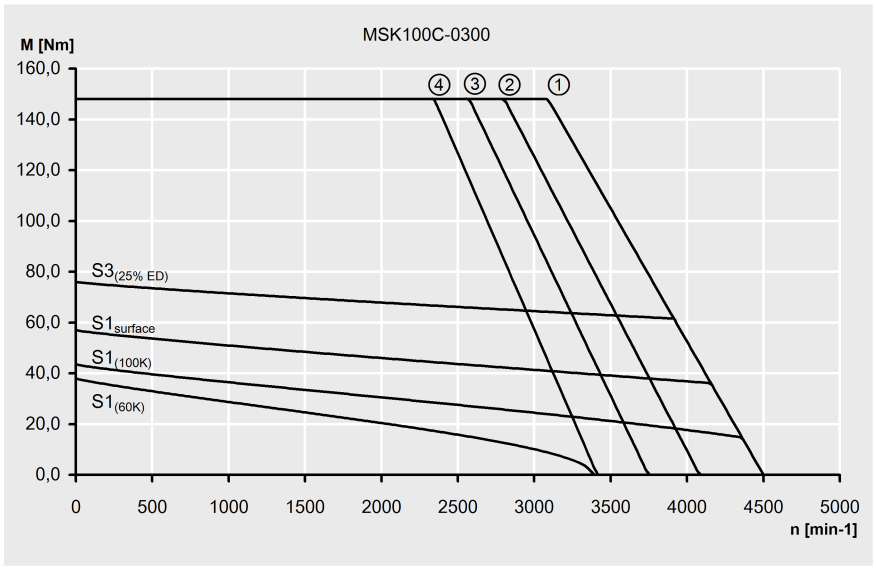

Fig. 4-61: Characteristic curve of a MSK100C-0300 motor

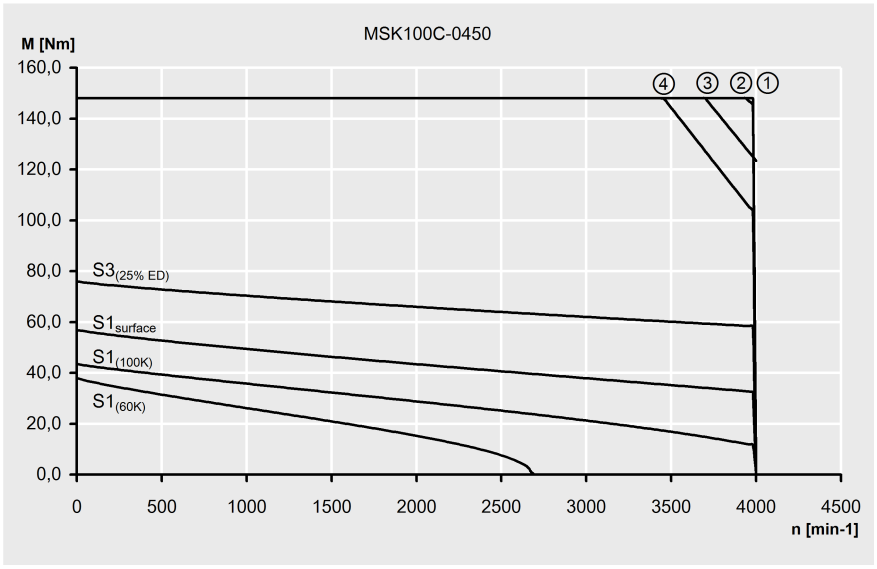

Fig. 4-62: Characteristic curve of a MSK100C-0450 motor

Technical Data

4.14.4 MSK100D - Technical Data

Designation	Symbol	Unit	MSK100D-0200-NN	MSK100D-0300-NN	MSK100D-0350-NN
Continuous torque at standstill 60 K	M_{0_60}	Nm	48.0		
Continuous current at standstill 60 K	$I_{0_60(rms)}$	A	13.0	20.7	29.9
Continuous torque at standstill 100 K	M_{0_100}	Nm	57.0		
Continuous current at standstill 100 K	$I_{0_100(rms)}$	A	15.4	24.8	35.5
Continuous torque at standstill. surface	M_{0_S}	Nm	72.0		
Continuous current at standstill. surface	$I_{0_S(rms)}$	A	19.5	31.1	44.9
Maximum torque	M_{max}	Nm	187.0		185.0
Maximum current	$I_{max(rms)}$	A	58.5	93.2	135.0
Torque constant at 20 °C	K_{M_N}	Nm/A	4.28	2.55	1.86
Voltage constant at 20 °C[1)]	K_{EMK_1000}	V/1.000 min-1	263.5	157.0	114.5
Winding resistance at 20 °C	R_{12}	Ohm	0.97	0.35	0.2
Winding inductivity	L_{12}	mH	14.8	5.65	3.2
Discharge capacity of the component	C_{dis}	nF	17.6	16.0	18.0
Number of pole pairs	o	-	4		
Moment of inertia of the rotor	J_{rot}	kg*m²	0.03500		
Thermal time constant	T_{th_nom}	min	90.0		
Maximum velocity	n_{max}	min^{-1}	2000	3000	
Sound pressure level	L_P	dB[A]	< 75		
Weight [2)]	m	kg	56.0 (59.8)		
Surrounding air temperature during operation	T_{amb}	°C	0 ... 40		
Protection class acc. to EN 60034-5	-	-	IP65		
Thermal class acc. to EN 60034-1	T.CL.	-	155		
Latest amendment: 2014-01-21					

1) Manufacturing tolerance ±5 %
2) (...) Motors with holding brakes 1, 2, ...

Tab. 4-28: MSK - Technical data

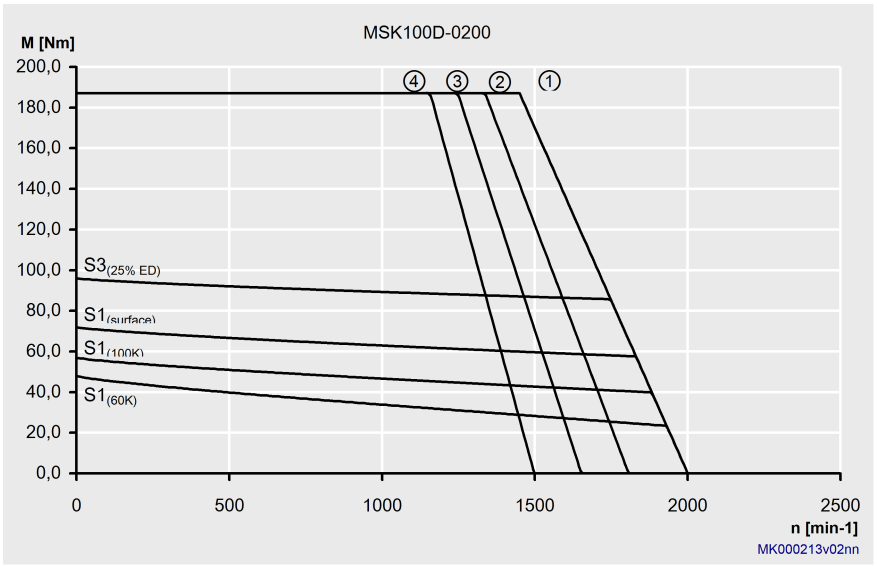

Fig. 4-63: Characteristic curve of a MSK100D-0200 motor

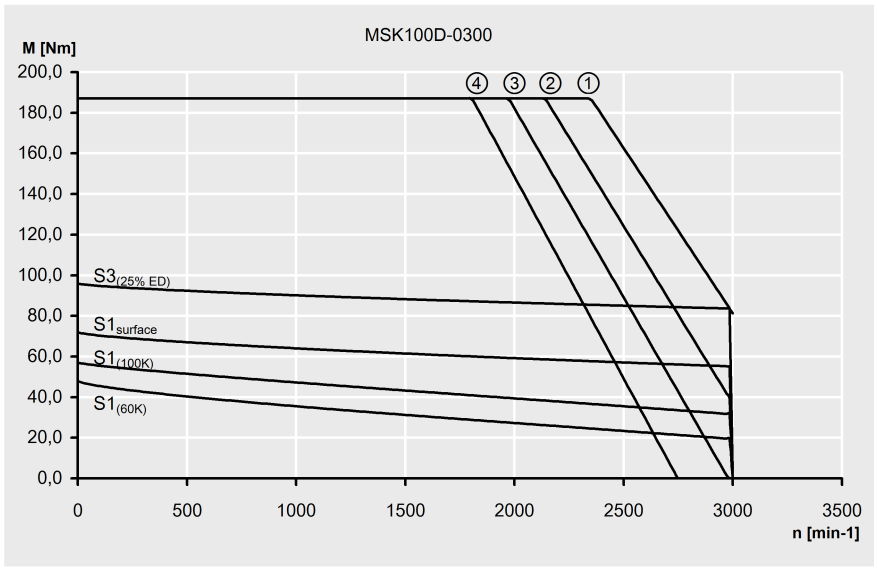

Fig. 4-64: Characteristic curve of a MSK100D-0300 motor

Technical Data

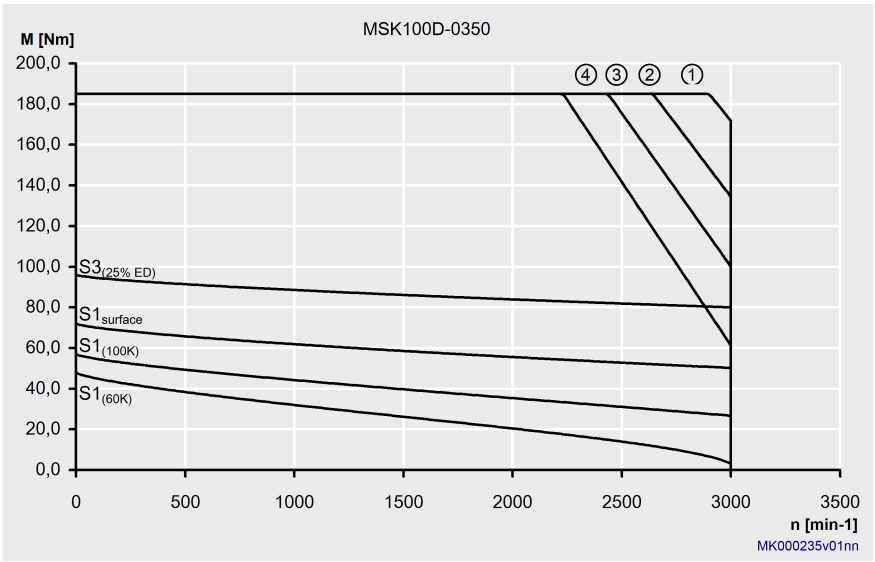

Fig. 4-65: Characteristic curve of a MSK100D-0350 motor

4.15 MSK101

4.15.1 MSK101C - Technical Data

Designation	Symbol	Unit	MSK101C -0200-FN	MSK101C -0200-NN	MSK101C -0300-FN	MSK101C -0300-NN	MSK101C -0450-FN	MSK101C -0450-NN
Continuous torque at standstill 60 K	M_{0_60}	Nm	32.0					
Continuous current at standstill 60 K	$I_{0_60(rms)}$	A	14.9		18.7		25.1	
Continuous torque at standstill 100 K	M_{0_100}	Nm	36.5					
Continuous current at standstill 100 K	$I_{0_100(rms)}$	A	17.0		21.3		37.7	28.6
Continuous torque at standstill, surface	M_{0_S}	Nm	---	48.0	---	48.0		48.0
Continuous current at standstill. surface	$I_{0_S(rms)}$	A	---	22.4	---	28.1		37.7
Standstill continuous torque liquid	M_{0_L}	Nm	60.8	---	60.8	---	60.8	---
Continuous standstill current liquid	$I_{0_L(rms)}$	A	28.3	---	35.3	---	47.7	---
Maximum torque	M_{max}	Nm	110.0					
Maximum current	$I_{max(rms)}$	A	67.1		84.2		113.0	
Torque constant at 20 °C	K_{M_N}	Nm/A	2.37		1.88		1.40	
Voltage constant at 20 °C[1)]	K_{EMK_1000}	V/1.000 min-1	146.0		115.7		86.3	
Winding resistance at 20 °C	R_{12}	Ohm	0.68		0.45		0.23	
Winding inductivity	L_{12}	mH	9.7		6.0		3.3	
Discharge capacity of the component	C_{dis}	nF	6.2				6.8	
Number of pole pairs	o	-	4					
Moment of inertia of the rotor	J_{rot}	kg*m^2	0.00650					
Thermal time constant	T_{th_nom}	min	5.0	36.0	5.0	38.0	5.0	36.0
Maximum velocity	n_{max}	min^{-1}	3300		4500		5800	
Sound pressure level	L_P	dB[A]	< 75					
Weight [2)]	m	kg	28.3 (32.1)					
Surrounding air temperature during operation	T_{amb}	°C	0 ... 40					
Protection class acc. to EN 60034-5	-	-	IP65					
Thermal class acc. to EN 60034-1	T.CL.	-	155					
Data liquid cooling								
Power loss to be dissipated	P_V	kW	1.20	---	1.20	---	1.20	---
Coolant inlet temperature	T_{in}	°C	10 ... 40	---	10 ... 40	---	10 ... 40	---
Allowed coolant temperature rise at P_V	ΔT_{max}	K	10	---	10	---	10	---
Necessary coolant flow at P_V	Q_{min}	l/min	1.7	---	1.7	---	1.7	---
Pressure loss at Q_{min}	Δp	bar	0.6	---	0.6	---	0.6	---
Maximum allowed inlet pressure	p_{max}	bar	6.0	---	6.0	---	6.0	---
Volume of coolant duct	V_{cool}	u	0.09	---	0.09	---	0.09	---
Latest amendment: 2014-01-21								

1) Manufacturing tolerance ±5 %
2) (...) Motors with holding brakes 1, 2, ...

Tab. 4-29: MSK - Technical data

Technical Data

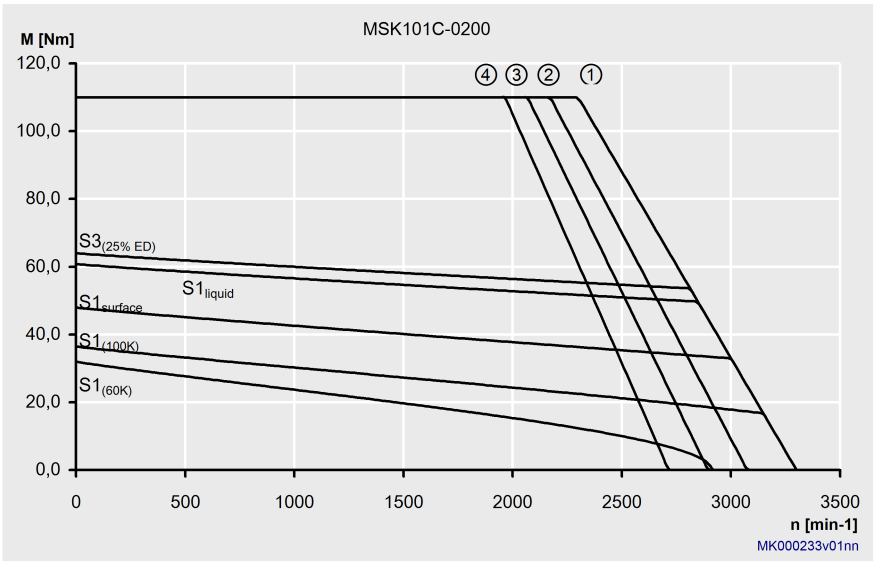

Fig. 4-66: Characteristic curve of a MSK101C-0200 motor

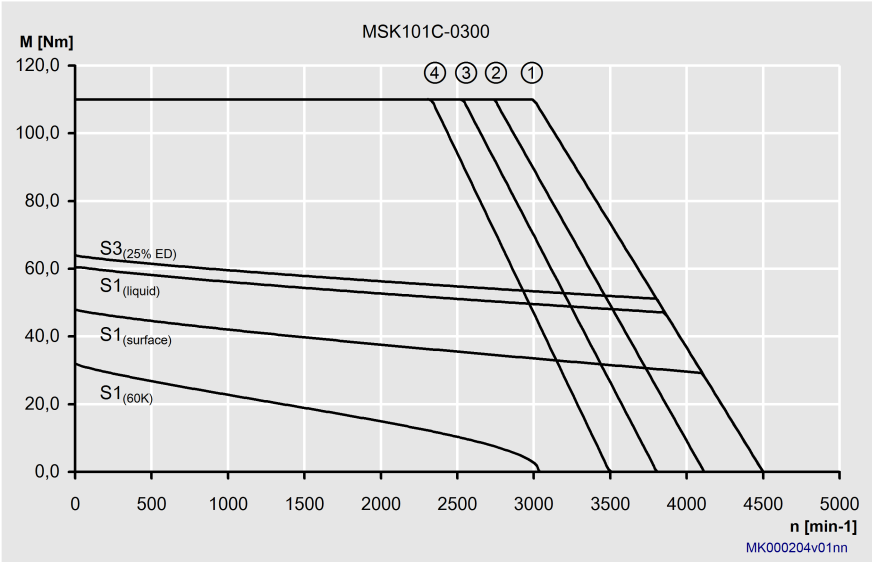

Fig. 4-67: Characteristic curve of a MSK101C-300 motor

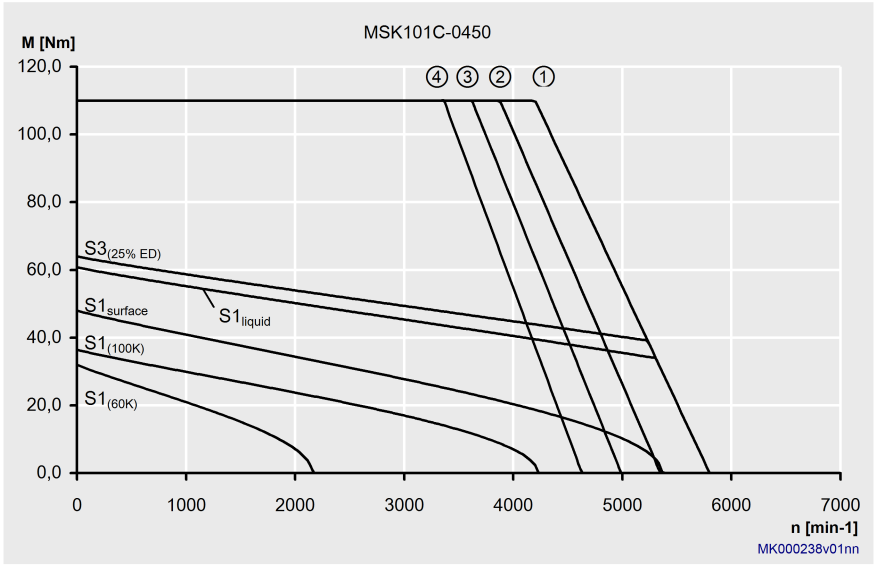

Fig. 4-68: Characteristic curve of a MSK101C-0450 motor

Technical Data

4.15.2 MSK101D - Technical Data

Designation	Symbol	Unit	MSK101D -0200-FN	MSK101D -0200-NN	MSK101D -0300-FN	MSK101D -0300-NN	MSK101D -0450-FN	MSK101D -0450-NN
Continuous torque at standstill 60 K	M_{0_60}	Nm	50.0					
Continuous current at standstill 60 K	$I_{0_60(rms)}$	A	22.2		30.6		41.7	
Continuous torque at standstill 100 K	M_{0_100}	Nm	57.0					
Continuous current at standstill 100 K	$I_{0_100(rms)}$	A	26.8		34.9		50.6	
Continuous torque at standstill. surface	M_{0_S}	Nm	---	75.0	---	75.0	---	75.0
Continuous current at standstill. surface	$I_{0_S(rms)}$	A	---	33.3	---	45.9	---	66.0
Standstill continuous torque liquid	M_{0_L}	Nm	95.0	---	95.0	---	95.0	---
Continuous standstill current liquid	$I_{0_L(rms)}$	A	43.3	---	58.1	---	79.2	---
Maximum torque	M_{max}	Nm	160.0					
Maximum current	$I_{max(rms)}$	A	99.9		137.7		187.7	
Torque constant at 20 °C	K_{M_N}	Nm/A	2.48		1.80		1.32	
Voltage constant at 20 °C[1)]	K_{EMK_1000}	V/1,000 min-1	152.0		113.0		81.0	
Winding resistance at 20 °C	R_{12}	Ohm	0.35		0.19		0.1	
Winding inductivity	L_{12}	mH	6.0		3.2		1.7	
Discharge capacity of the component	C_{dis}	nF	13.2		9.1		13.2	
Number of pole pairs	o	-	4					
Moment of inertia of the rotor	J_{rot}	kg*m²	0.00932					
Thermal time constant	T_{th_nom}	min	5.0	100.0	5.0	100.0	5.0	100.0
Maximum velocity	n_{max}	min^{-1}	3400		4600		6000	
Sound pressure level	L_P	dB[A]	< 75					
Weight [2)]	m	kg	40.0 (43.8) (46.2)					
Surrounding air temperature during operation	T_{amb}	°C	0 ... 40					
Protection class acc. to EN 60034-5	-	-	IP65					
Thermal class acc. to EN 60034-1	T.CL.	-	155					
Data liquid cooling								
Power loss to be dissipated	P_V	kW	1.35	---	1.35	---	1.35	---
Coolant inlet temperature	T_{in}	°C	10 ... 40	---	10 ... 40	---	10 ... 40	---
Allowed coolant temperature rise at P_V	ΔT_{max}	K	10	---	10	---	10	---
Necessary coolant flow at P_V	Q_{min}	l/min	2.0	---	2.0	---	2.0	---
Pressure loss at Q_{min}	Δp	bar	0.7	---	0.7	---	0.7	---
Maximum allowed inlet pressure	p_{max}	bar	6.0	---	6.0	---	6.0	---
Volume of coolant duct	V_{cool}	u	0.11	---	0.11	---	0.11	---
Latest amendment: 2014-01-21								

1) Manufacturing tolerance ±5 %
2) (...) Motors with holding brakes 1, 2, ...

Tab. 4-30: MSK - Technical data

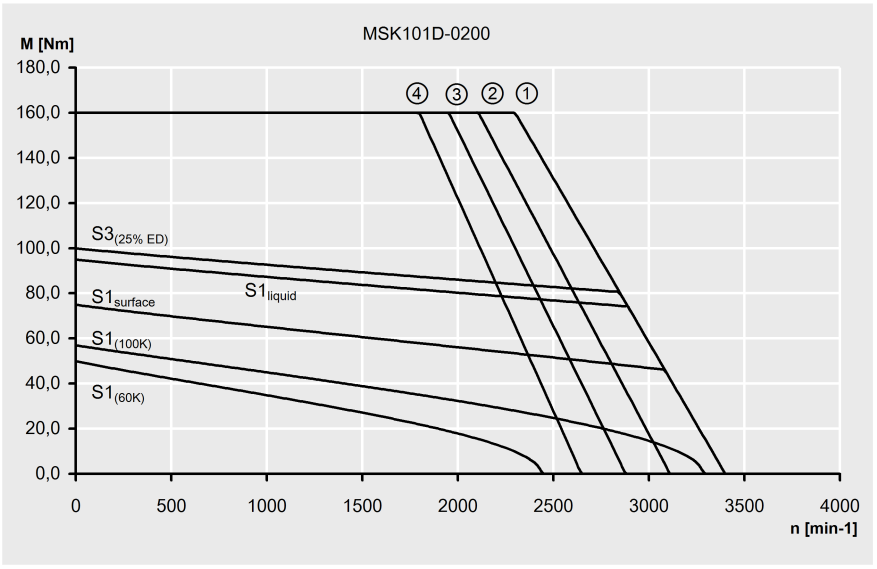

Fig. 4-69: Characteristic curve of a MSK101D-0200 motor

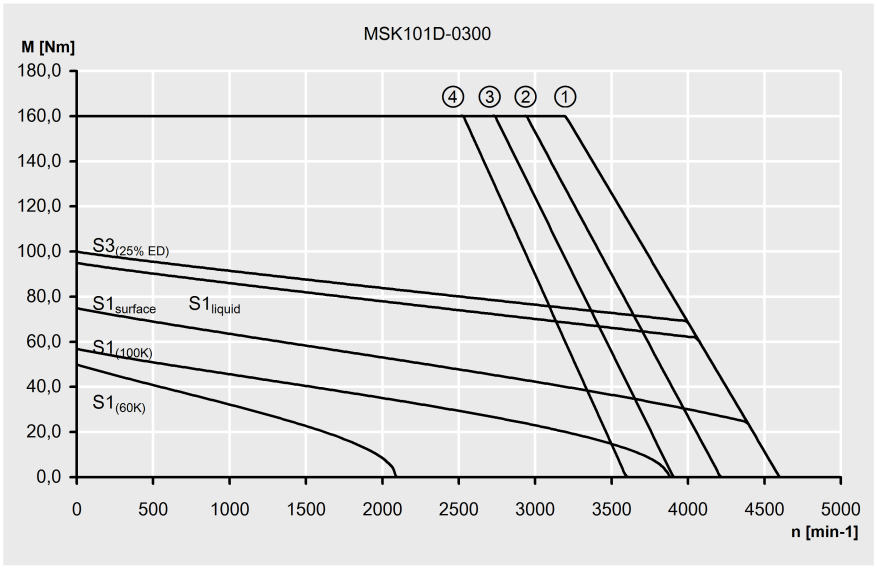

Fig. 4-70: Characteristic curve of a MSK101D-300 motor

Technical Data

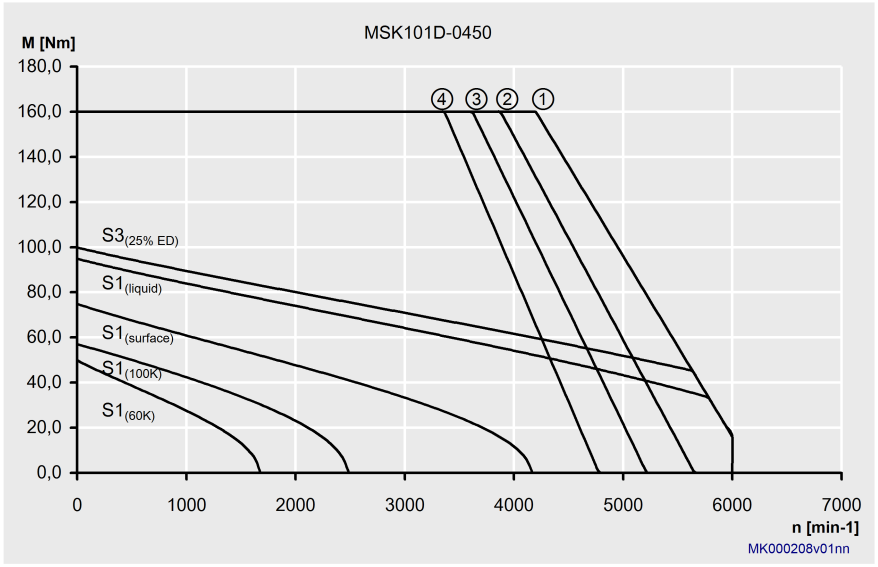

Fig. 4-71: Characteristic curve of a MSK101D-0450 motor

4.15.3 MSK101E - Technical Data

Designation	Symbol	Unit	MSK101E -0200-FN	MSK101E -0200-NN	MSK101E -0300-FN	MSK101E -0300-NN	MSK101E -0450-FN	MSK101E -0450-NN
Continuous torque at standstill 60 K	M_{0_60}	Nm	70.0					
Continuous current at standstill 60 K	$I_{0_60(rms)}$	A	32.1		41.6		58.3	
Continuous torque at standstill 100 K	M_{0_100}	Nm	80.5					
Continuous current at standstill 100 K	$I_{0_100(rms)}$	A	39.0		47.8		67.6	
Continuous torque at standstill, surface	M_{0_S}	Nm	---	105.5	---	105.0	---	105.0
Continuous current at standstill. surface	$I_{0_S(rms)}$	A	---	48.2	---	62.4	---	87.5
Standstill continuous torque liquid	M_{0_L}	Nm	133.0	---	133.0	---	116.0	---
Continuous standstill current liquid	$I_{0_L(rms)}$	A	63.8	---	79.0	---	97.0	---
Maximum torque	M_{max}	Nm	231.0					
Maximum current	$I_{max(rms)}$	A	144.5		187.4		262.4	
Torque constant at 20 °C	K_{M_N}	Nm/A	2.40		1.85		1.32	
Voltage constant at 20 °C[1)]	K_{EMK_1000}	V/1.000 min-1	148.0		113.8		81.2	
Winding resistance at 20 °C	R_{12}	Ohm	0.18		0.11		0.06	
Winding inductivity	L_{12}	mH	3.3		1.96		1.08	
Discharge capacity of the component	C_{dis}	nF	15.2		16.7			
Number of pole pairs	o	-	4					
Moment of inertia of the rotor	J_{rot}	kg*m²	0.01380					
Thermal time constant	T_{th_nom}	min	5.0	100.0	5.0	100.0	5.0	100.0
Maximum velocity	n_{max}	min-1	4,500		4,600		6,000	
Sound pressure level	L_P	dB[A]	< 75					
Weight [2)]	m	kg	53.5 (57.3) (59.7)					
Surrounding air temperature during operation	T_{amb}	°C	0 ... 40					
Protection class acc. to EN 60034-5	-	-	IP65					
Thermal class acc. to EN 60034-1	T.CL.	-	155					
Data liquid cooling								
Power loss to be dissipated	P_V	kW	1.50	---	1.50	---	1.50	---
Coolant inlet temperature	T_{in}	°C	10 ... 40	---	10 ... 40	---	10 ... 40	---
Allowed coolant temperature rise at P_V	ΔT_{max}	K	10	---	10	---	10	---
Necessary coolant flow at P_V	Q_{min}	l/min	2.2	---	2.2	---	2.2	---
Pressure loss at Q_{min}	Δp	bar	0.8	---	0.8	---	0.8	---
Maximum allowed inlet pressure	p_{max}	bar	6.0	---	6.0	---	6.0	---
Volume of coolant duct	V_{cool}	u	0.14	---	0.14	---	0.14	---
Latest amendment: 2014-01-21								

1) Manufacturing tolerance ±5 %
2) (...) Motors with holding brakes 1, 2, ...

Tab. 4-31: MSK - Technical data

Technical Data

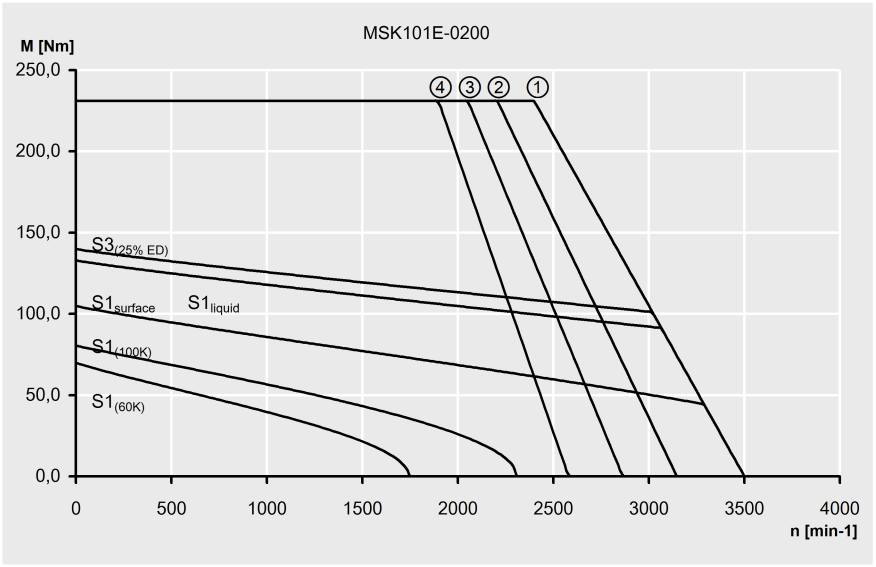

Fig. 4-72: Characteristic curve of a MSK101E-0200 motor

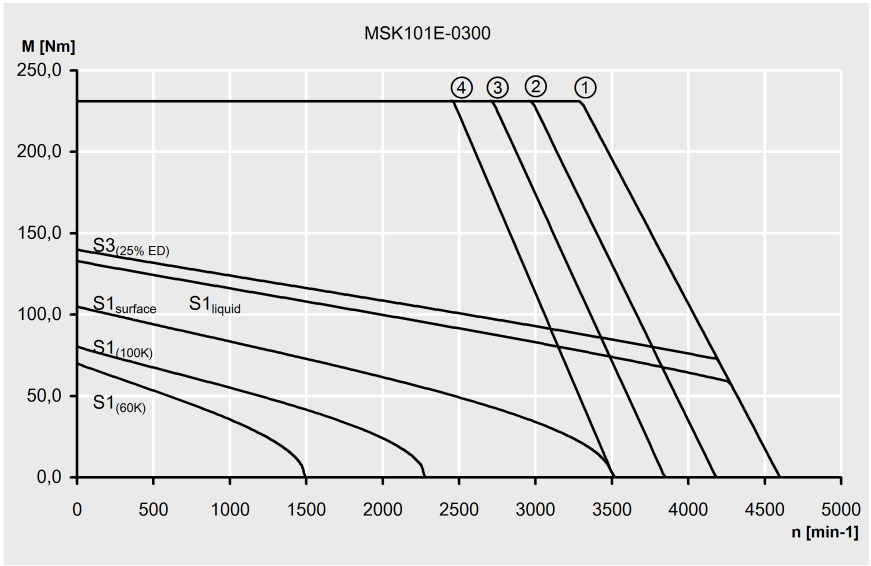

Fig. 4-73: Characteristic curve of a MSK101E-300 motor

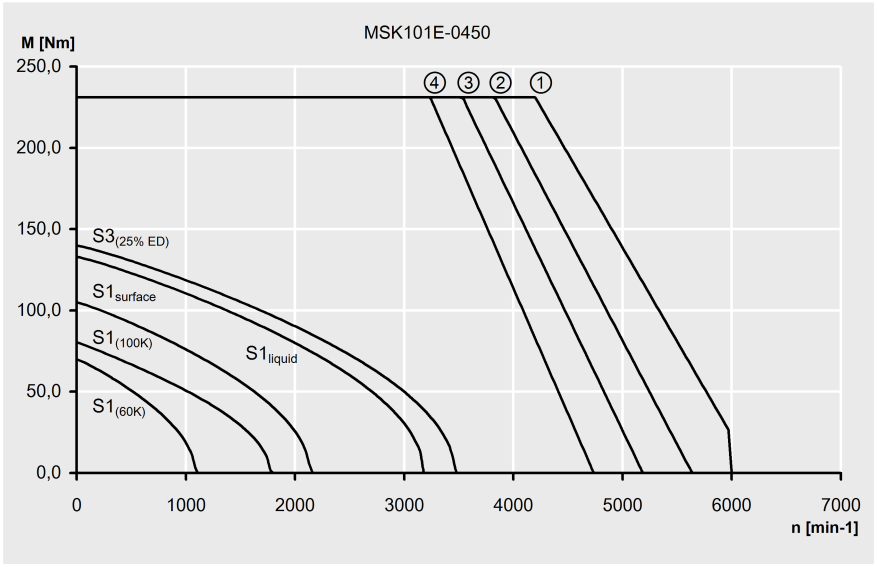

Fig. 4-74: Characteristic curve of a MSK101E-0450 motor

Technical Data

4.16 MSK103

4.16.1 MSK103A - Technical Data

Designation	Symbol	Unit	MSK103A-0300-NN
Continuous torque at standstill 60 K	M_{0_60}	Nm	21.0
Continuous current at standstill 60 K	$I_{0_60(rms)}$	A	12.5
Continuous torque at standstill 100 K	M_{0_100}	Nm	24.0
Continuous current at standstill 100 K	$I_{0_100(rms)}$	A	14.3
Maximum torque	M_{max}	Nm	51.0
Maximum current	$I_{max(rms)}$	A	40.0
Torque constant at 20 °C	K_{M_N}	Nm/A	1.74
Voltage constant at 20 °C[1)]	K_{EMK_1000}	V/1,000 min-1	111.0
Winding resistance at 20 °C	R_{12}	Ohm	0.59
Winding inductivity	L_{12}	mH	12.8
Discharge capacity of the component	C_{dis}	nF	1.5
Number of pole pairs	o	-	4
Moment of inertia of the rotor	J_{rot}	$kg*m^2$	0.00442
Thermal time constant	T_{th_nom}	min	25.0
Maximum velocity	n_{max}	min^{-1}	4800
Sound pressure level	L_P	dB[A]	< 75
Weight [2)]	m	kg	18.0
Surrounding air temperature during operation	T_{amb}	°C	0 ... 40
Protection class acc. to EN 60034-5	-	-	IP65
Thermal class acc. to EN 60034-1	T.CL.	-	155
			Latest amendment: 2014-05-05

1) Manufacturing tolerance ±5 %
2) (...) Motors with holding brakes 1, 2, ...

Tab. 4-32: MSK - Technical data

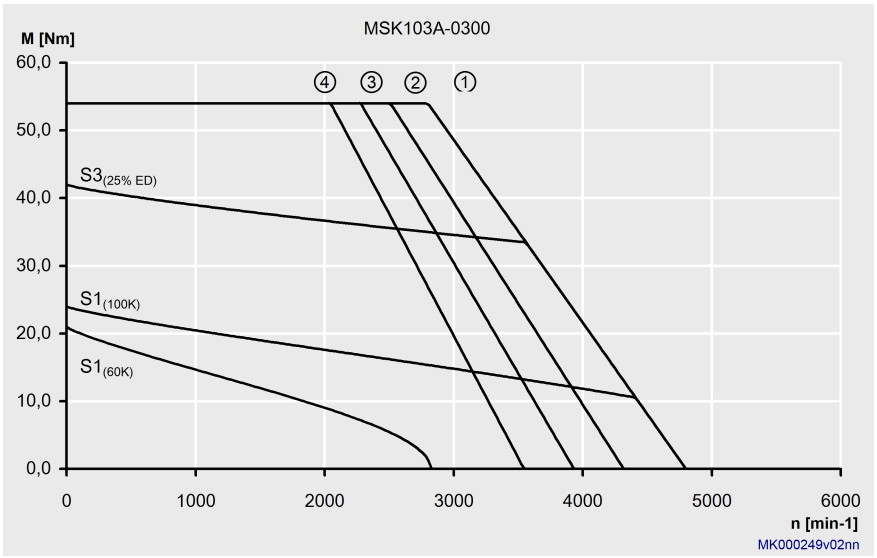

Fig. 4-75: Characteristic curve of a MSK103A-0300 motor

Technical Data

4.16.2 MSK103B - Technical Data

Designation	Symbol	Unit	MSK103B-0300-NN
Continuous torque at standstill 60 K	M_{0_60}	Nm	28.0
Continuous current at standstill 60 K	$I_{0_60(rms)}$	A	17.0
Continuous torque at standstill 100 K	M_{0_100}	Nm	31.0
Continuous current at standstill 100 K	$I_{0_100(rms)}$	A	19.0
Maximum torque	M_{max}	Nm	85.0
Maximum current	$I_{max(rms)}$	A	63.0
Torque constant at 20 °C	K_{M_N}	Nm/A	1.76
Voltage constant at 20 °C[1)]	K_{EMK_1000}	V/1,000 min-1	108.0
Winding resistance at 20 °C	R_{12}	Ohm	0.36
Winding inductivity	L_{12}	mH	8.0
Discharge capacity of the component	C_{dis}	nF	2.1
Number of pole pairs	o	-	4
Moment of inertia of the rotor	J_{rot}	kg*m²	0.00594
Thermal time constant	T_{th_nom}	min	27.0
Maximum velocity	n_{max}	min^{-1}	4700
Sound pressure level	L_P	dB[A]	< 75
Weight [2)]	m	kg	22.5
Surrounding air temperature during operation	T_{amb}	°C	0 ... 40
Protection class acc. to EN 60034-5	-	-	IP65
Thermal class acc. to EN 60034-1	T.CL.	-	155
			Latest amendment: 2014-05-05

1) Manufacturing tolerance ±5 %
2) (...) Motors with holding brakes 1, 2, ...

Tab. 4-33: MSK - Technical data

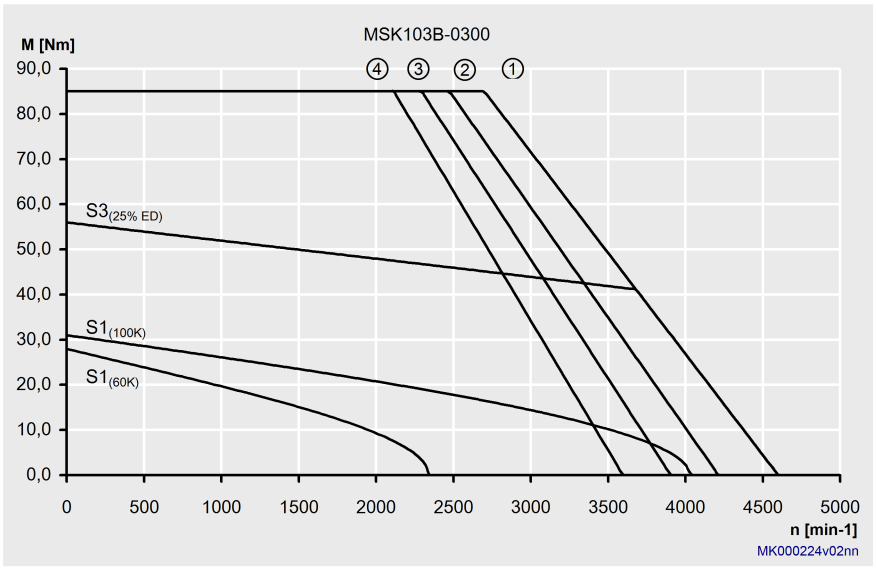

Fig. 4-76: Characteristic curve of a MSK103B-0300 motor

4.16.3 MSK103D - Technical Data

Designation	Symbol	Unit	MSK103D-0300-NN
Continuous torque at standstill 60 K	M_{0_60}	Nm	46.0
Continuous current at standstill 60 K	$I_{0_60(rms)}$	A	26.3
Continuous torque at standstill 100 K	M_{0_100}	Nm	53.0
Continuous current at standstill 100 K	$I_{0_100(rms)}$	A	30.8
Maximum torque	M_{max}	Nm	138.0
Maximum current	$I_{max(rms)}$	A	94.7
Torque constant at 20 °C	K_{M_N}	Nm/A	1.84
Voltage constant at 20 °C[1)]	K_{EMK_1000}	V/1,000 min-1	113.0
Winding resistance at 20 °C	R_{12}	Ohm	0.2
Winding inductivity	L_{12}	mH	4.87
Discharge capacity of the component	C_{dis}	nF	6.0
Number of pole pairs	o	-	4
Moment of inertia of the rotor	J_{rot}	kg*m^2	0.00894
Thermal time constant	T_{th_nom}	min	36.0
Maximum velocity	n_{max}	min^{-1}	4600
Sound pressure level	L_P	dB[A]	< 75
Weight [2)]	m	kg	31.6
Surrounding air temperature during operation	T_{amb}	°C	0 ... 40
Protection class acc. to EN 60034-5	-	-	IP65
Thermal class acc. to EN 60034-1	T.CL.	-	155
			Latest amendment: 2014-05-05

1) Manufacturing tolerance ±5 %
2) (...) Motors with holding brakes 1, 2, ...

Tab. 4-34: MSK - Technical data

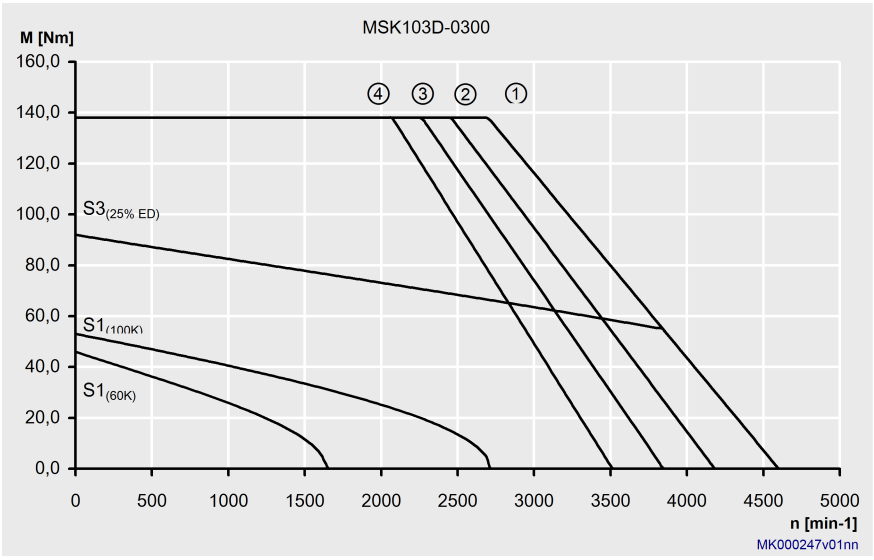

Fig. 4-77: Characteristic curve of a MSK103D-0300 motor

Technical Data

4.17 MSK131

4.17.1 MSK131B - Technical Data

Designation	Symbol	Unit	MSK131B-0200-NN
Continuous torque at standstill 60 K	M_{0_60}	Nm	85.0
Continuous current at standstill 60 K	$I_{0_60(rms)}$	A	36.7
Continuous torque at standstill 100 K	M_{0_100}	Nm	---
Continuous current at standstill 100 K	$I_{0_100(rms)}$	A	---
Continuous torque at standstill. surface	M_{0_S}	Nm	127.5
Continuous current at standstill. surface	$I_{0_S(rms)}$	A	55.1
Maximum torque	M_{max}	Nm	250.0
Maximum current	$I_{max(rms)}$	A	165.0
Torque constant at 20 °C	K_{M_N}	Nm/A	2.55
Voltage constant at 20 °C[1)]	K_{EMK_1000}	V/1,000 min-1	155.0
Winding resistance at 20 °C	R_{12}	Ohm	0.16
Winding inductivity	L_{12}	mH	5.3
Discharge capacity of the component	C_{dis}	nF	14.3
Number of pole pairs	o	-	4
Moment of inertia of the rotor	J_{rot}	$kg*m^2$	0.02320
Thermal time constant	T_{th_nom}	min	50.0
Maximum velocity	n_{max}	min^{-1}	3200
Sound pressure level	L_P	dB[A]	< 75
Weight [2)]	m	kg	84.0 (89.4)
Surrounding air temperature during operation	T_{amb}	°C	0 ... 40
Protection class acc. to EN 60034-5	-	-	IP65
Thermal class acc. to EN 60034-1	T.CL.	-	155
			Latest amendment: 2014-01-21

1) Manufacturing tolerance ±5 %
2) (...) Motors with holding brakes 1, 2, ...

Tab. 4-35: MSK - Technical data

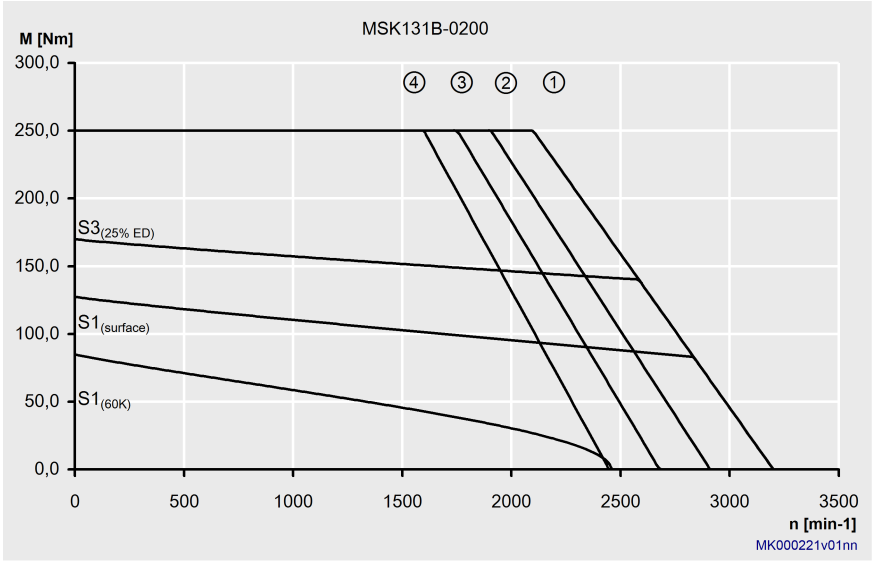

Fig. 4-78: Characteristic curve of a MSK131B-0200 motor

Technical Data

4.17.2 MSK131D - Technical Data

Designation	Symbol	Unit	MSK131D-0200-NN
Continuous torque at standstill 60 K	M_{0_60}	Nm	160.0
Continuous current at standstill 60 K	$I_{0_60(rms)}$	A	65.2
Continuous torque at standstill 100 K	M_{0_100}	Nm	---
Continuous current at standstill 100 K	$I_{0_100(rms)}$	A	---
Continuous torque at standstill. surface	M_{0_S}	Nm	240.0
Continuous current at standstill. surface	$I_{0_S(rms)}$	A	97.8
Maximum torque	M_{max}	Nm	495.0
Maximum current	$I_{max(rms)}$	A	293.4
Torque constant at 20 °C	K_{M_N}	Nm/A	2.70
Voltage constant at 20 °C[1)]	K_{EMK_1000}	V/1,000 min-1	170.0
Winding resistance at 20 °C	R_{12}	Ohm	0.071
Winding inductivity	L_{12}	mH	3.0
Discharge capacity of the component	C_{dis}	nF	27.7
Number of pole pairs	o	-	4
Moment of inertia of the rotor	J_{rot}	$kg*m^2$	0.03820
Thermal time constant	T_{th_nom}	min	64.0
Maximum velocity	n_{max}	min^{-1}	3000
Sound pressure level	L_P	dB[A]	< 75
Weight [2)]	m	kg	116.0 (121.4) (128.0)
Surrounding air temperature during operation	T_{amb}	°C	0 ... 40
Protection class acc. to EN 60034-5	-	-	IP65
Thermal class acc. to EN 60034-1	T.CL.	-	155
			Latest amendment: 2014-03-12

1) Manufacturing tolerance ±5 %
2) (...) Motors with holding brakes 1, 2, ...

Tab. 4-36: MSK - Technical data

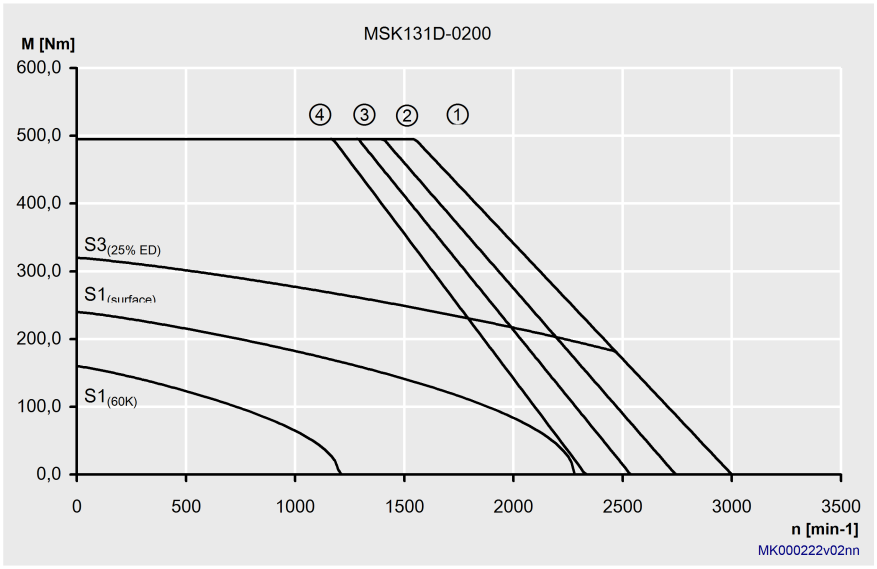

Fig. 4-79: Characteristic curve of a MSK131D-0200 motor

Technical Data

4.18 MSK133

4.18.1 MSK133B Technical Data

Data Sheet

Designation	Symbol	Unit	MSK133B-0202-SA	MSK133B-0203-FN
Continuous torque at standstill, surface	M_{0_S}	Nm	152.0	---
Continuous current at standstill. surface	$I_{0_S(rms)}$	A	63.0	---
Standstill continuous torque liquid	M_{0_L}	Nm	---	162.0
Continuous standstill current liquid	$I_{0_L(rms)}$	A	---	69.4
Maximum torque	M_{max}	Nm	320.0	300.0
Maximum current	$I_{max(rms)}$	A	160.0	
Torque constant at 20 °C	K_{M_N}	Nm/A	2.34	
Voltage constant at 20 °C[1)]	K_{EMK_1000}	V/1,000 min-1	155.2	
Winding resistance at 20 °C	R_{12}	Ohm	0.153	
Winding inductivity	L_{12}	mH	10.5	9.5
Discharge capacity of the component	C_{dis}	nF	14.4	10.7
Number of pole pairs	o	-	3	
Moment of inertia of the rotor	J_{rot}	kg*m^2	0.04760	
Thermal time constant	T_{th_nom}	min	16.6	8.0
Maximum velocity	n_{max}	min^{-1}	3300	
Sound pressure level	L_P	dB[A]	< 78	
Mass	m	kg	91.6	
Surrounding air temperature during operation	T_{amb}	°C	0 ... 40	
Protection class acc. to EN 60034-5	-	-	IP65	
Insulation class according to EN 60034-1	T.CL.	-	155	
Data liquid cooling				
Power loss to be dissipated	P_V	kW	---	2.10
Coolant inlet temperature	T_{in}	°C	---	10...40
Allowed coolant temperature rise at P_V	ΔT_{max}	K	---	8
Necessary coolant flow at P_V	Q_{min}	l/min	---	4.0
Pressure loss at Q_{min}	Δp	bar	---	< 0.6
Maximum allowed inlet pressure	p_{max}	bar	---	6.0
Volume of coolant duct	V_{cool}	u	---	0.15
Material coolant duct			Stainless steel	
				Latest amendment: 2013-11-20

1) Manufacturing tolerance ±5 %

Tab. 4-37: MSK - Technical data

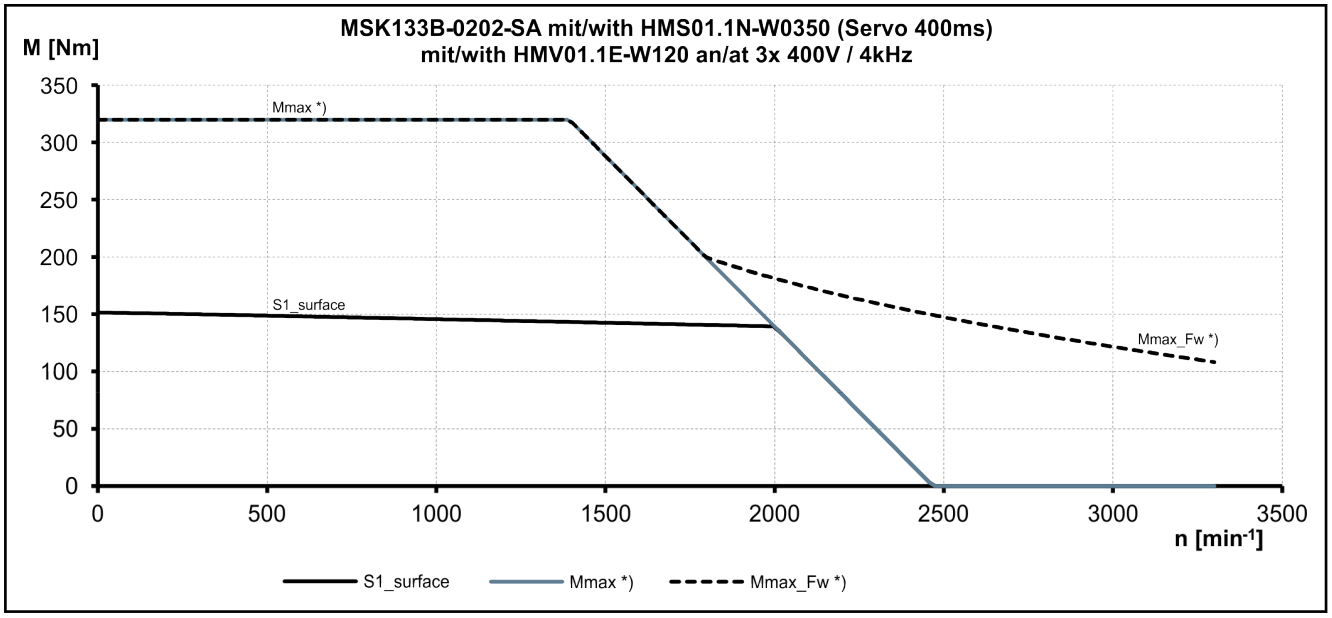

Mmax *) M_{max} IndraDrive, uncontrolled feed, 3 × AC 400 V with control reluctance characteristic curve (without field weakening)

Mmax_Fw *) M_{max} IndraDrive, uncontrolled feed 3 x AC 400 V with control reluctance characteristic curve and field weakening; characteristic curve valid for controller HCS04.2E-W0500

Fig. 4-80: Speed-torque characteristic curves

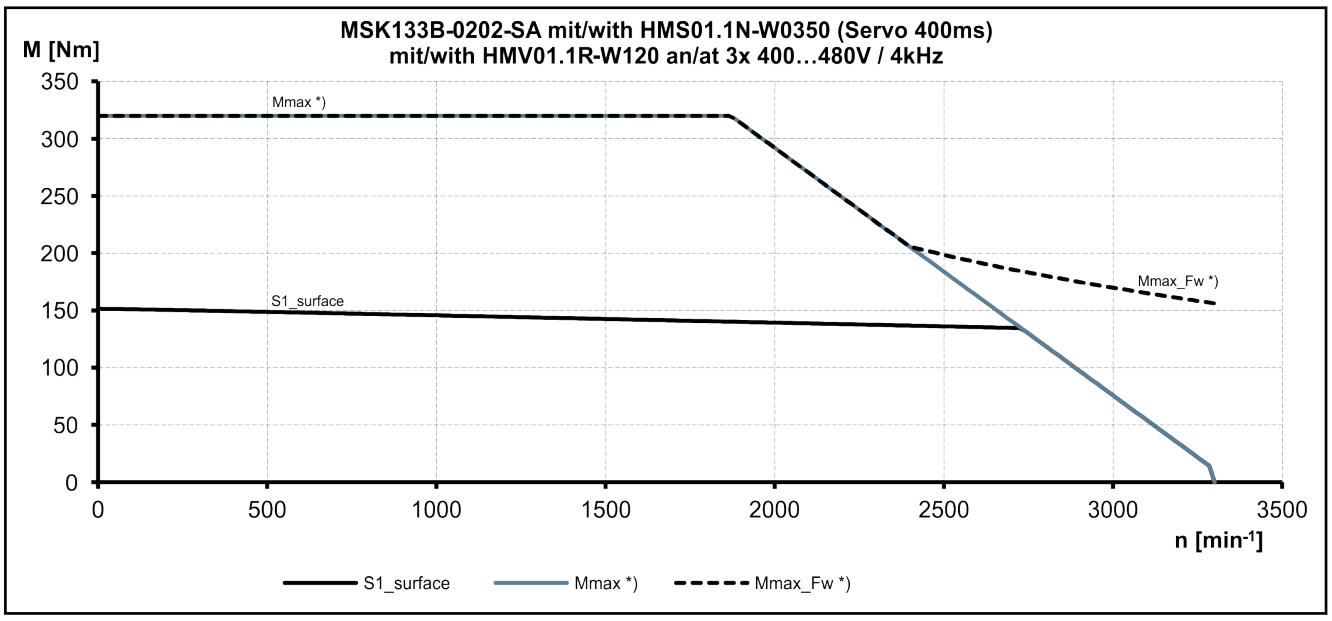

Mmax *) M_{max} IndraDrive, controlled feed, 3 × AC 0.480 V with control reluctance characteristic curve (without field weakening)

Mmax_Fw *) M_{max} IndraDrive, controlled feed 3 x AC 0.480 V with control reluctance characteristic curve and field weakening; characteristic curve valid for controller HCS04.2E-W0500

Fig. 4-81: Speed-torque characteristic curves

Technical Data

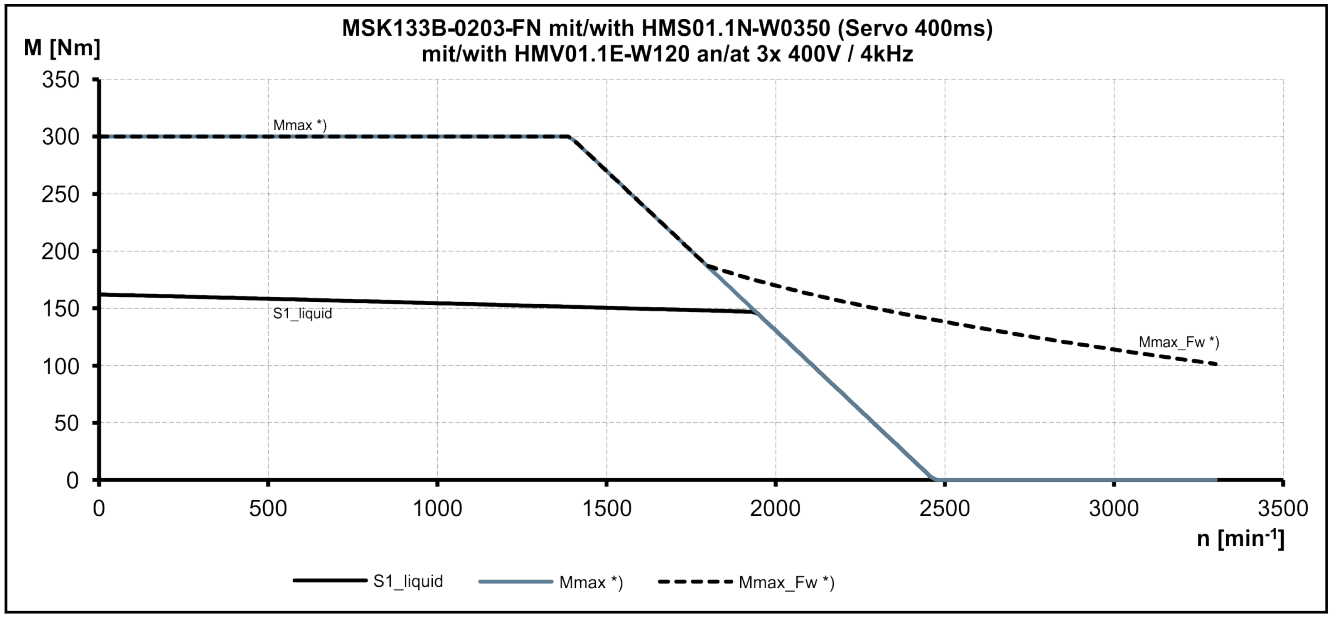

Mmax *) M_{max} IndraDrive, uncontrolled feed, 3 × AC 400 V with control reluctance characteristic curve (without field weakening)

Mmax_Fw *) M_{max} IndraDrive, uncontrolled feed 3 x AC 400 V with control reluctance characteristic curve and field weakening; characteristic curve valid for controller HCS04.2E-W0500

Fig. 4-82: Speed-torque characteristic curves

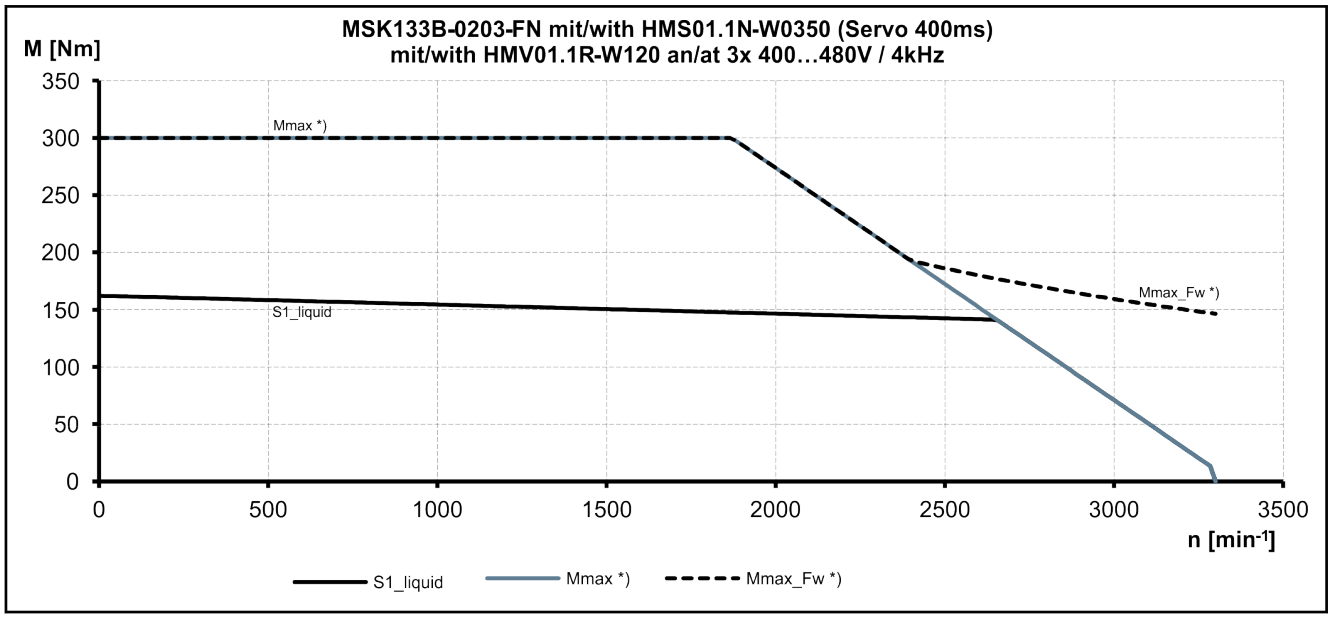

Mmax *) M_{max} IndraDrive, controlled feed, 3 × AC 0.480 V with control reluctance characteristic curve (without field weakening)

Mmax_Fw *) M_{max} IndraDrive, controlled feed 3 x AC 0.480 V with control reluctance characteristic curve and field weakening; characteristic curve valid for controller HCS04.2E-W0500

Fig. 4-83: Speed-torque characteristic curves

4.18.2 MSK133C Technical Data

Data Sheet

Designation	Symbol	Unit	MSK133C-0202-SA	MSK133C-0203-FN
Continuous torque at standstill, surface	M_{0_S}	Nm	204.0	---
Continuous current at standstill. surface	$I_{0_S(rms)}$	A	81.0	---
Standstill continuous torque liquid	M_{0_L}	Nm	---	232.5
Continuous standstill current liquid	$I_{0_L(rms)}$	A	---	93.0
Maximum torque	M_{max}	Nm	425.0	400.0
Maximum current	$I_{max(rms)}$	A	205.0	
Torque constant at 20 °C	K_{M_N}	Nm/A	2.47	
Voltage constant at 20 °C[1)]	K_{EMK_1000}	V/1,000 min-1	157.6	
Winding resistance at 20 °C	R_{12}	Ohm	0.103	
Winding inductivity	L_{12}	mH	7.8	7
Discharge capacity of the component	C_{dis}	nF	15.2	
Number of pole pairs	o	-	3	
Moment of inertia of the rotor	J_{rot}	kg*m^2	0.06800	
Thermal time constant	T_{th_nom}	min	16.6	8.0
Maximum velocity	n_{max}	min^{-1}	3300	
Sound pressure level	L_P	dB[A]	< 78	
Mass	m	kg	111.0	
Surrounding air temperature during operation	T_{amb}	°C	0 ... 40	
Protection class acc. to EN 60034-5	-	-	IP65	
Insulation class according to EN 60034-1	T.CL.	-	155	
Data liquid cooling				
Power loss to be dissipated	P_V	kW	---	2.70
Coolant inlet temperature	T_{in}	°C	---	10...40
Allowed coolant temperature rise at P_V	ΔT_{max}	K	---	8
Necessary coolant flow at P_V	Q_{min}	l/min	---	5.0
Pressure loss at Q_{min}	Δp	bar	---	< 0.75
Maximum allowed inlet pressure	p_{max}	bar	---	6.0
Volume of coolant duct	V_{cool}	u	---	0.18
Material coolant duct			Stainless steel	
				Latest amendment: 2013-11-11

1) Manufacturing tolerance ±5 %

Tab. 4-38: MSK - Technical data

Technical Data

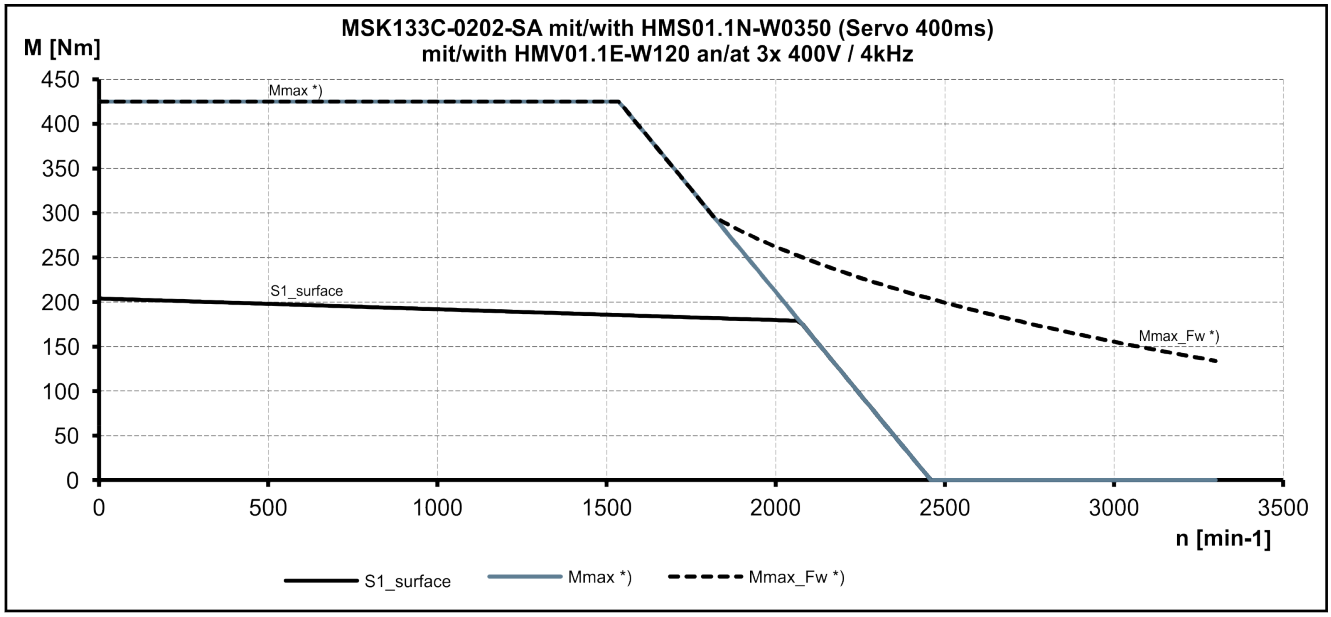

Mmax *) M_{max} IndraDrive, uncontrolled feed, 3 × AC 400 V with control reluctance characteristic curve (without field weakening)

Mmax_Fw *) M_{max} IndraDrive, uncontrolled feed 3 x AC 400 V with control reluctance characteristic curve and field weakening; characteristic curve valid for controller HCS04.2E-W0500

Fig. 4-84: Speed-torque characteristic curves

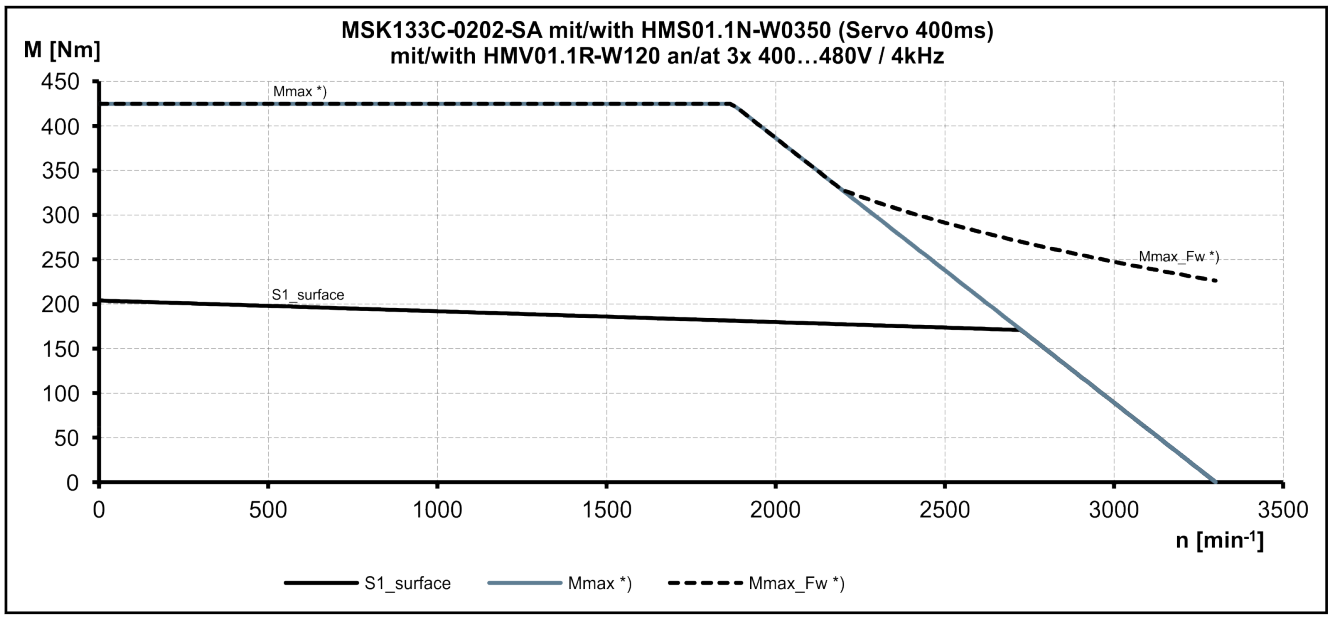

Mmax *) M_{max} IndraDrive, controlled feed, 3 × AC 400 ... 480 V with control reluctance characteristic curve (without field weakening)

Mmax_Fw *) M_{max} IndraDrive, controlled feed 3 x AC 400 ... 480V with control reluctance characteristic curve and field weakening; characteristic curve valid for controller HCS04.2E-W0500

Fig. 4-85: Speed-torque characteristic curves

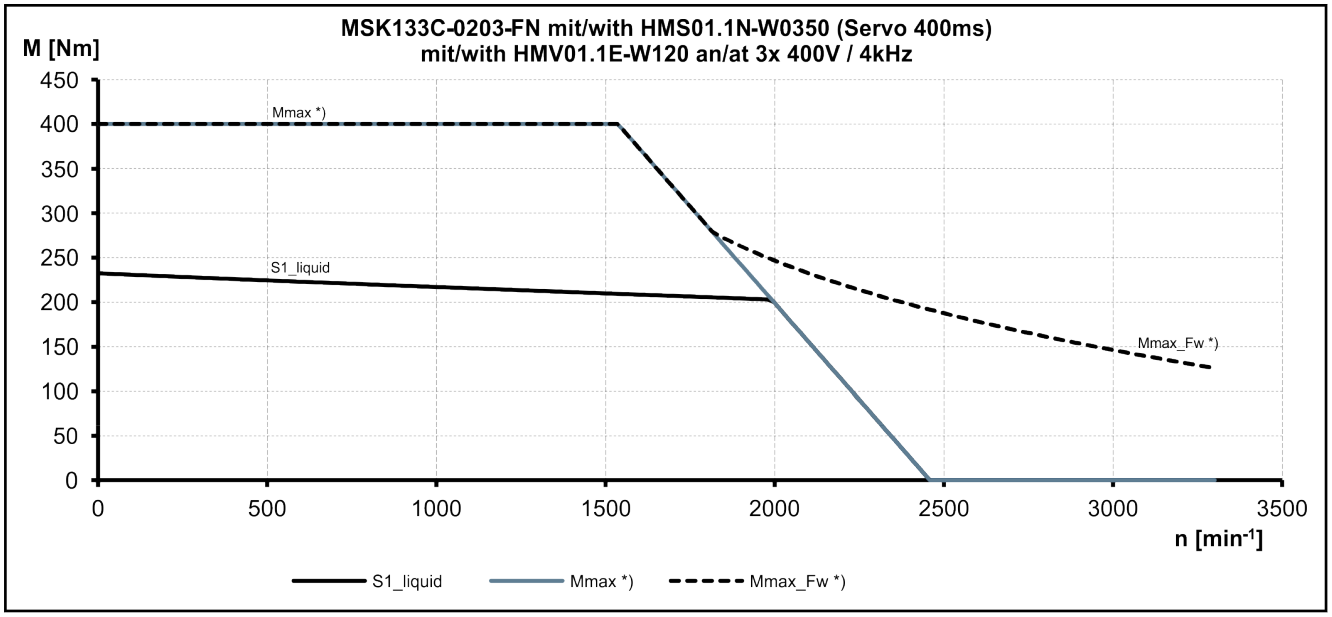

Mmax *) M_{max} IndraDrive, uncontrolled feed, 3 × AC 400 V with control reluctance characteristic curve (without field weakening)

Mmax_Fw *) M_{max} IndraDrive, uncontrolled feed 3 x AC 400 V with control reluctance characteristic curve and field weakening; characteristic curve valid for controller HCS04.2E-W0500

Fig. 4-86: Speed-torque characteristic curves

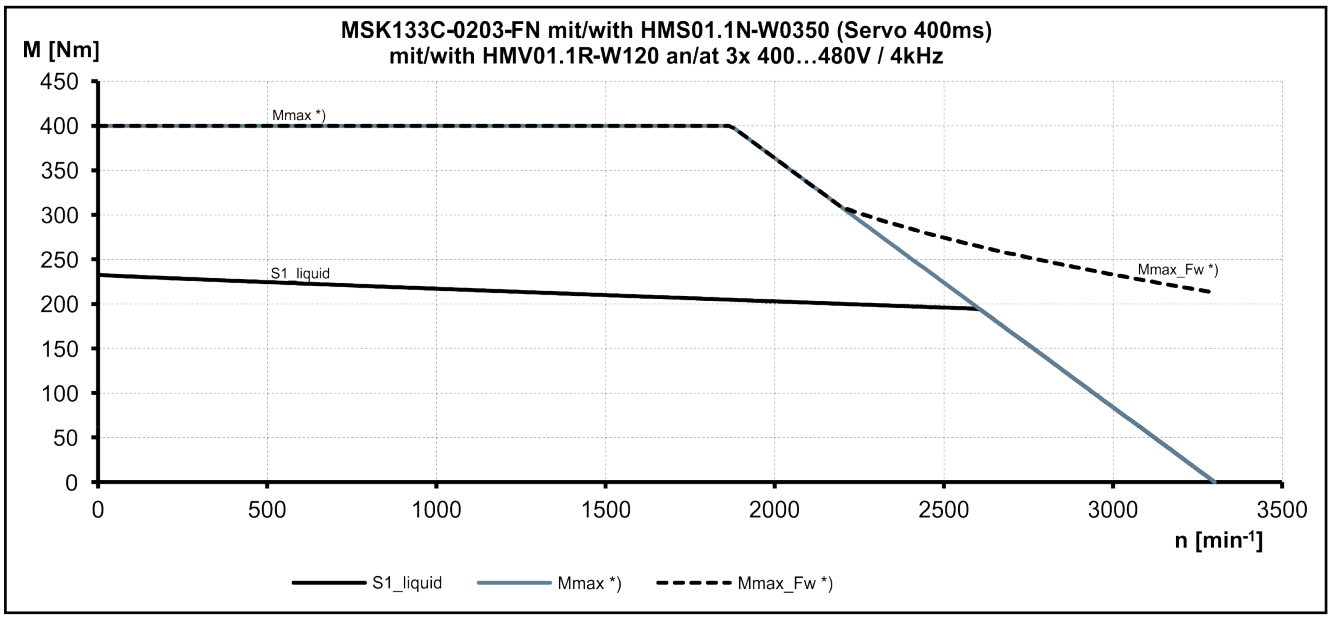

Mmax *) M_{max} IndraDrive, controlled feed, 3 × AC 400 ... 480 V with control reluctance characteristic curve (without field weakening)

Mmax_Fw *) M_{max} IndraDrive, controlled feed 3 x AC 400 ... 480V with control reluctance characteristic curve and field weakening; characteristic curve valid for controller HCS04.2E-W0500

Fig. 4-87: Speed-torque characteristic curves

Technical Data

4.18.3 MSK133D Technical Data

Data Sheet

Designation	Symbol	Unit	MSK133D-0202-SA	MSK133D-0203-FN
Continuous torque at standstill, surface	M_{0_S}	Nm	250.0	---
Continuous current at standstill. surface	$I_{0_S(rms)}$	A	100.0	---
Standstill continuous torque liquid	M_{0_L}	Nm	---	290.0
Continuous standstill current liquid	$I_{0_L(rms)}$	A	---	122.2
Maximum torque	M_{max}	Nm	520.0	500.0
Maximum current	$I_{max(rms)}$	A	265.0	
Torque constant at 20 °C	K_{M_N}	Nm/A	2.45	
Voltage constant at 20 °C[1)]	K_{EMK_1000}	V/1,000 min-1	155.8	
Winding resistance at 20 °C	R_{12}	Ohm	0.075	
Winding inductivity	L_{12}	mH	6.1	6
Discharge capacity of the component	C_{dis}	nF	16.4	18.4
Number of pole pairs	o	-	3	
Moment of inertia of the rotor	J_{rot}	kg*m^2	0.07800	
Thermal time constant	T_{th_nom}	min	18.2	8.0
Maximum velocity	n_{max}	min^{-1}	3300	
Sound pressure level	L_P	dB[A]	< 78	
Mass	m	kg	127.0	
Surrounding air temperature during operation	T_{amb}	°C	0 ... 40	
Protection class acc. to EN 60034-5	-	-	IP65	
Insulation class according to EN 60034-1	T.CL.	-	155	
Data liquid cooling				
Power loss to be dissipated	P_V	kW	---	3.10
Coolant inlet temperature	T_{in}	°C	---	10...40
Allowed coolant temperature rise at P_V	ΔT_{max}	K	---	8
Necessary coolant flow at P_V	Q_{min}	l/min	---	6.0
Pressure loss at Q_{min}	Δp	bar	---	< 0.9
Maximum allowed inlet pressure	p_{max}	bar	---	6.0
Volume of coolant duct	V_{cool}	u	---	0.21
Material coolant duct			Stainless steel	
				Latest amendment: 2013-11-25

1) Manufacturing tolerance ±5 %

Tab. 4-39: MSK - Technical data

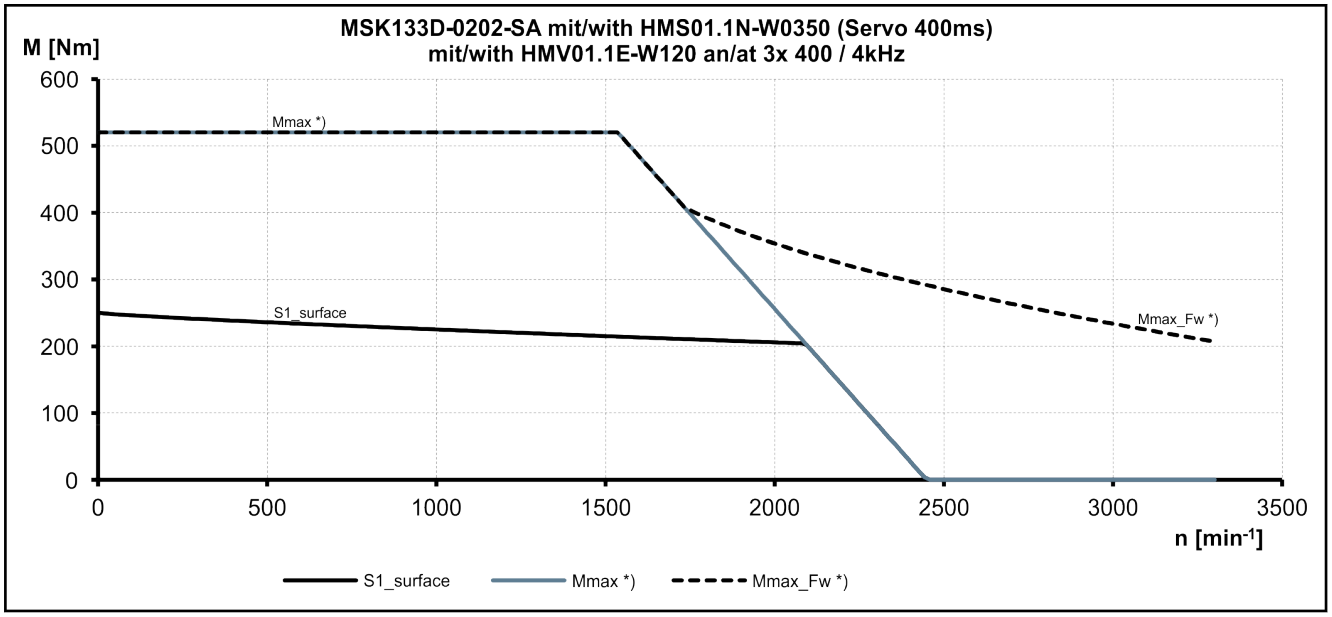

Mmax *) M_{max} IndraDrive, uncontrolled feed, 3 × AC 400 V with control reluctance characteristic curve (without field weakening)

Mmax_Fw *) M_{max} IndraDrive, uncontrolled feed 3 x AC 400 V with control reluctance characteristic curve and field weakening; characteristic curve valid for controller HCS04.2E-W0500

Fig. 4-88: Speed-torque characteristic curves

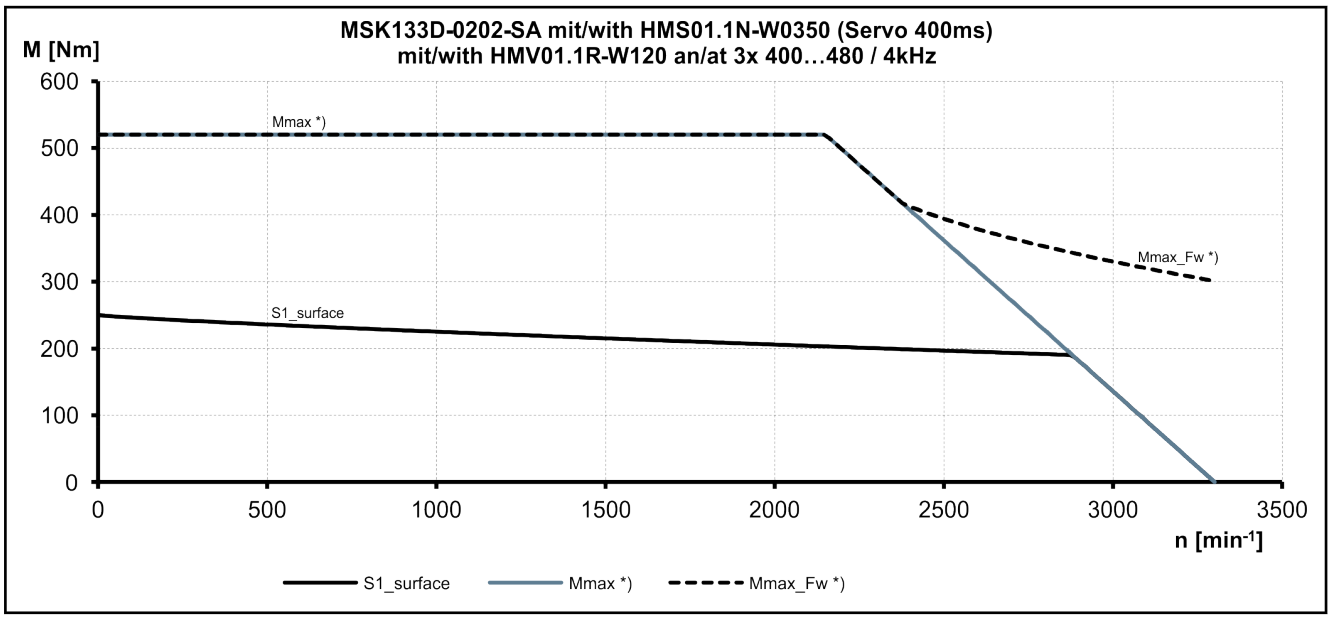

Mmax *) M_{max} IndraDrive, controlled feed, 3 × AC 400 ... 480 V with control reluctance characteristic curve (without field weakening)

Mmax_Fw *) M_{max} IndraDrive, controlled feed 3 x AC 400 ... 480 V with control reluctance characteristic curve and field weakening; characteristic curve valid for controller HCS04.2E-W0500

Fig. 4-89: Speed-torque characteristic curves

Technical Data

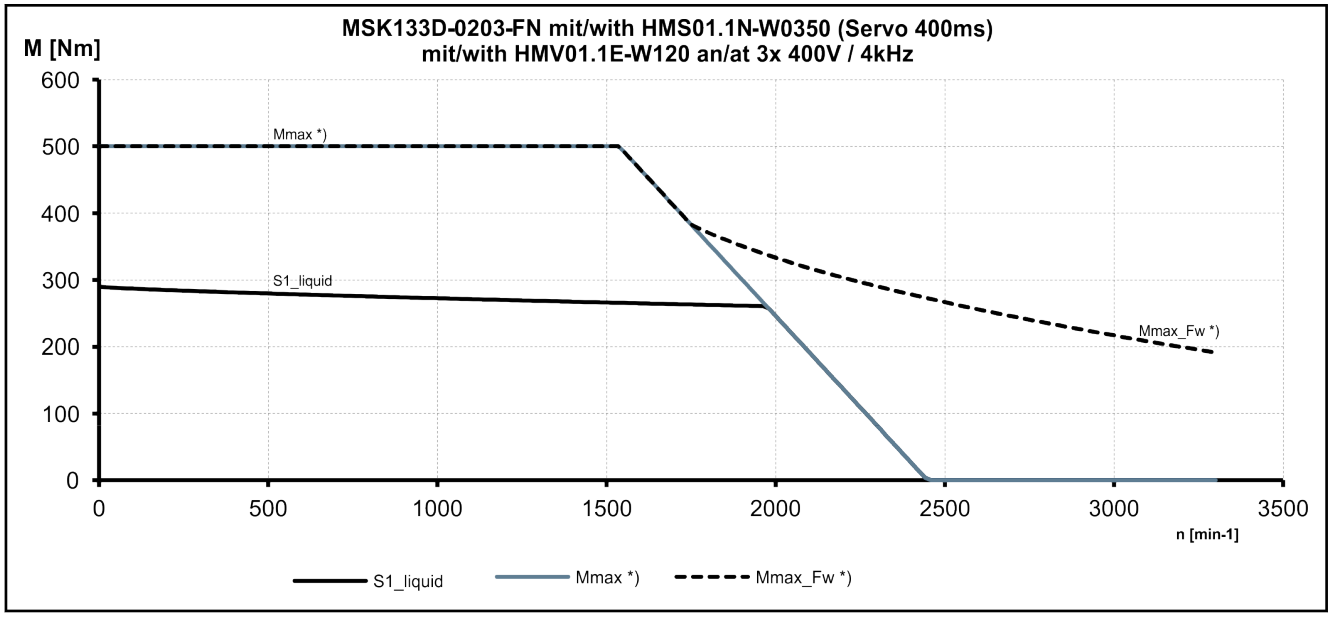

Mmax *) M_{max} IndraDrive, uncontrolled feed, 3 × AC 400 V with control reluctance characteristic curve (without field weakening)

Mmax_Fw *) M_{max} IndraDrive, uncontrolled feed 3 x AC 400 V with control reluctance characteristic curve and field weakening; characteristic curve valid for controller HCS04.2E-W0500

Fig. 4-90: Speed-torque characteristic curves

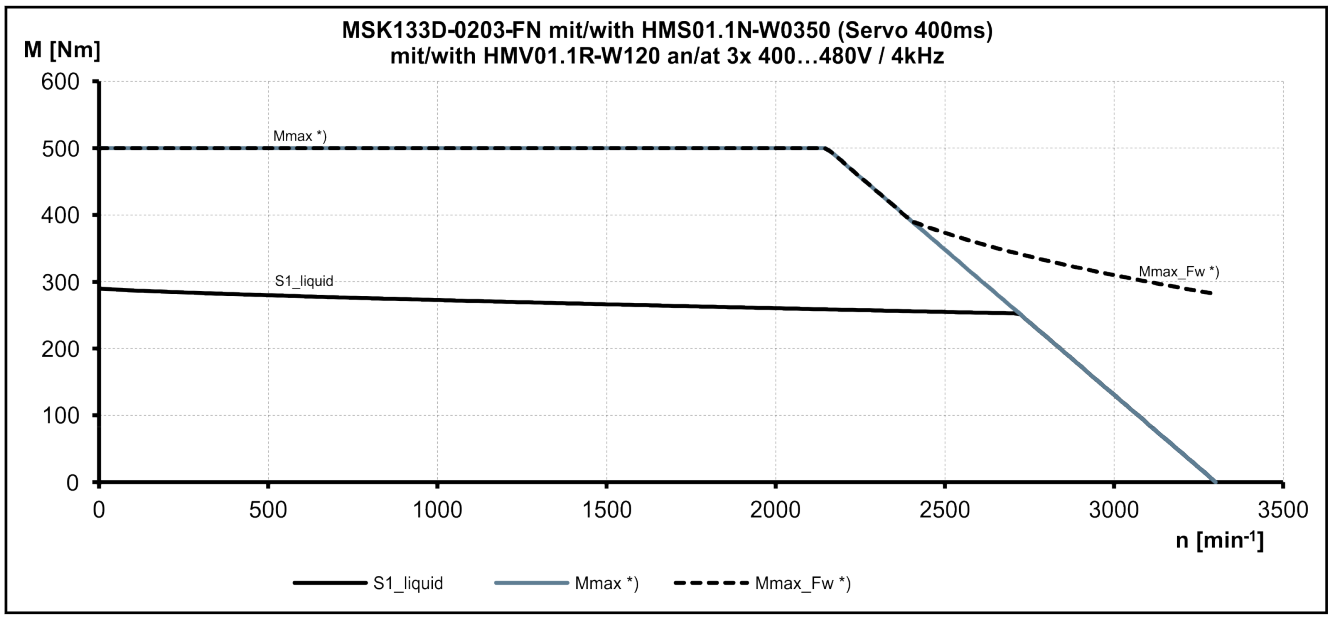

Mmax *) M_{max} IndraDrive, controlled feed, 3 × AC 400 ... 480 V with control reluctance characteristic curve (without field weakening)

Mmax_Fw *) M_{max} IndraDrive, controlled feed 3 x AC 400 ... 480 V with control reluctance characteristic curve and field weakening; characteristic curve valid for controller HCS04.2E-W0500

Fig. 4-91: Speed-torque characteristic curves

4.18.4 MSK133E Technical Data

Data Sheet

Designation	Symbol	Unit	MSK133E-0202-SA	MSK133E-0203-FN
Continuous torque at standstill, surface	M_{0_S}	Nm	293.0	---
Continuous current at standstill. surface	$I_{0_S(rms)}$	A	115.0	---
Standstill continuous torque liquid	M_{0_L}	Nm	---	342.0
Continuous standstill current liquid	$I_{0_L(rms)}$	A	---	135.5
Maximum torque	M_{max}	Nm	630.7	583.0
Maximum current	$I_{max(rms)}$	A	305.0	
Torque constant at 20 °C	K_{M_N}	Nm/A	2.48	
Voltage constant at 20 °C[1)]	K_{EMK_1000}	V/1.000 min-1	159.8	
Winding resistance at 20 °C	R_{12}	Ohm	0.06	
Winding inductivity	L_{12}	mH	5.3	4.8
Discharge capacity of the component	C_{dis}	nF	24.3	22.6
Number of pole pairs	o	-	3	
Moment of inertia of the rotor	J_{rot}	kg*m^2	0.09000	
Thermal time constant	T_{th_nom}	min	16.0	8.0
Maximum velocity	n_{max}	min^{-1}	3300	
Sound pressure level	L_P	dB[A]	< 78	
Mass	m	kg	146.0	
Surrounding air temperature during operation	T_{amb}	°C	0 ... 40	
Protection class acc. to EN 60034-5	-	-	IP65	
Insulation class according to EN 60034-1	T.CL.	-	155	
Data liquid cooling				
Power loss to be dissipated	P_V	kW	---	3.20
Coolant inlet temperature	T_{in}	°C	---	10...40
Allowed coolant temperature rise at P_V	ΔT_{max}	K	---	8
Necessary coolant flow at P_V	Q_{min}	l/min	---	6.0
Pressure loss at Q_{min}	Δp	bar	---	<1.0
Maximum allowed inlet pressure	p_{max}	bar	---	6.0
Volume of coolant duct	V_{cool}	u	---	0.24
Material coolant duct			Stainless steel	
				Latest amendment: 2013-11-11

1) Manufacturing tolerance ±5 %

Tab. 4-40: MSK - Technical data

Technical Data

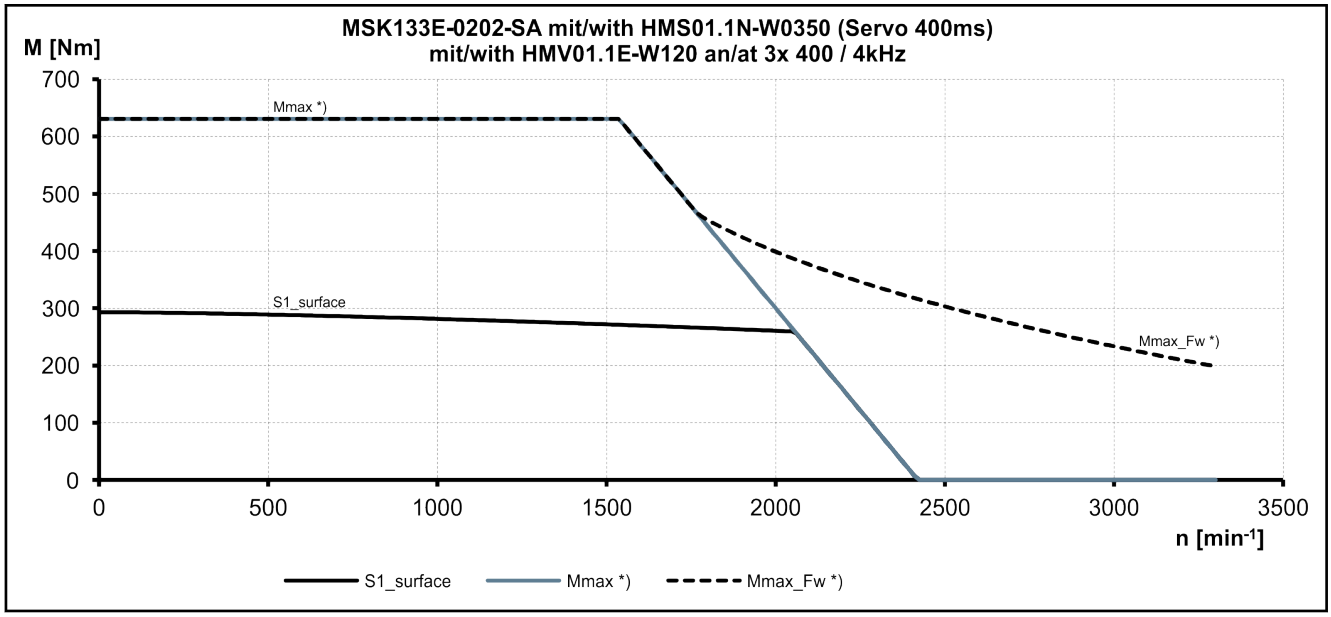

Mmax *) M_{max} IndraDrive, uncontrolled feed 3 × AC 400 V with control reluctance characteristic curve (without field weakening)

Mmax_Fw *) M_{max} IndraDrive, uncontrolled feed 3 x AC 400 V with control reluctance characteristic curve and field weakening; characteristic curve valid for controller HCS04.2E-W0500

Fig. 4-92: Speed-torque characteristic curves

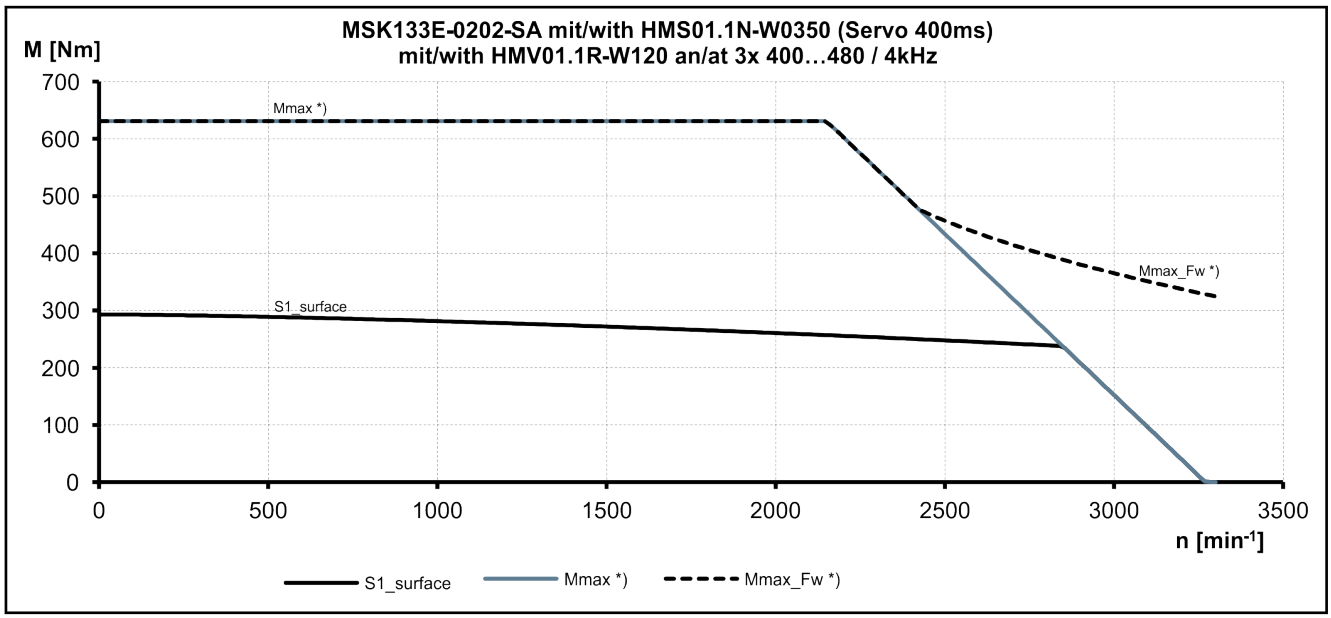

Mmax *) M_{max} IndraDrive, controlled feed, 3 × AC 400 ... 480 V with control reluctance characteristic curve (without field weakening)

Mmax_Fw *) M_{max} IndraDrive, controlled feed 3 x AC 400 ... 480 V with control reluctance characteristic curve and field weakening; characteristic curve valid for controller HCS04.2E-W0500

Fig. 4-93: Speed-torque characteristic curves

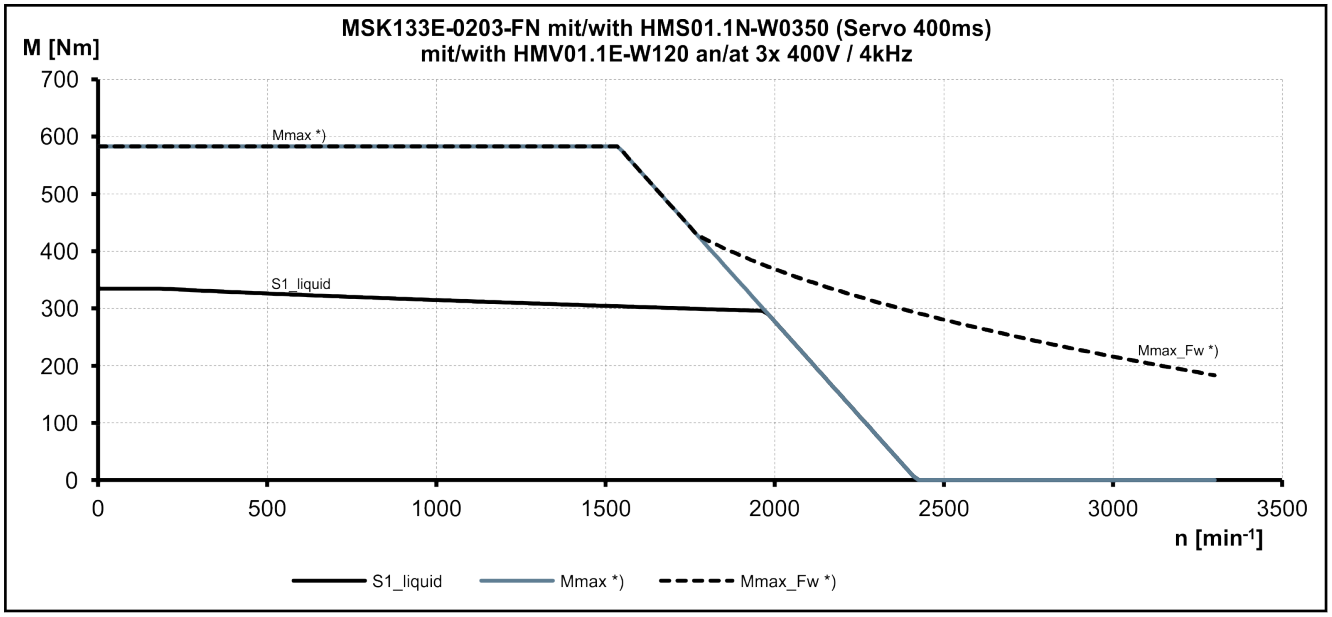

Mmax *) M_{max} IndraDrive, uncontrolled feed, 3 × AC 400 V with control reluctance characteristic curve (without field weakening)

Mmax_Fw *) M_{max} IndraDrive, uncontrolled feed 3 x AC 400 V with control reluctance characteristic curve and field weakening; characteristic curve valid for controller HCS04.2E-W0500

Fig. 4-94: Speed-torque characteristic curves

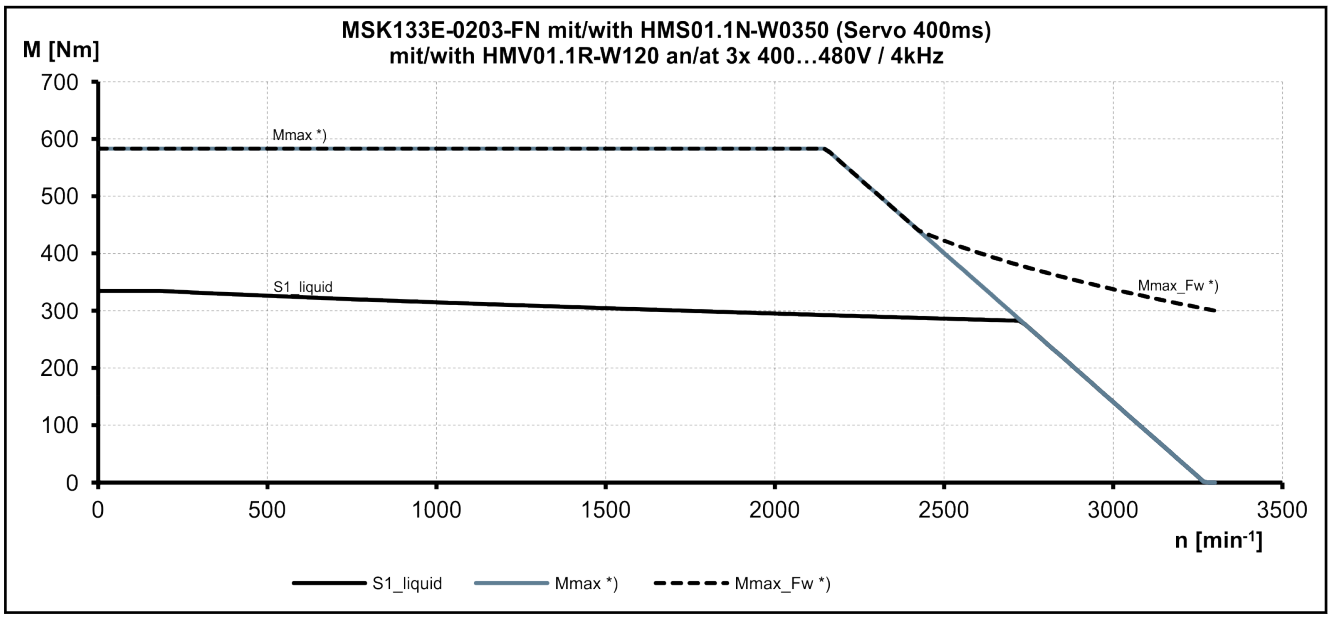

Mmax *) M_{max} IndraDrive, controlled feed, 3 × AC 400 ... 480 V with control reluctance characteristic curve (without field weakening)

Mmax_Fw *) M_{max} IndraDrive, controlled feed 3 x AC 400 ... 480 V with control reluctance characteristic curve and field weakening; characteristic curve valid for controller HCS04.2E-W0500

Fig. 4-95: Speed-torque characteristic curves

Technical Data

4.18.5 MSK133 Technical Data Fan

Designation	Symbol	Unit	Value	
Nominal voltage	U_N	V	3× AC 400	3× AC 480
Air flow direction			B --> A	
Mean volume flow		m^3/h	350	
Nominal frequency	f	Hz	50/60	
Fan current [1)]	I_N	A	0.19 / 0.28	0.18 / 0.26
Blocking current	I_{Block}	A	0.55 / 0.47	0.62 / 0.55
Power consumption	S_N	VA	132 /197	151 / 217
Degree of protection			IP65	

1) Fan current monitoring from 1.2 × I_N

Tab. 4-41: MSK133 fan - technical data

Connect the fan unit via connector RLS0782.

5 Specifications

5.1 Technical Design

Motor Design

Motor frame size B5 acc. to EN60034-7 (for additional information see chapter 9.3 "Design and Installation Positions" on page 212)

Housing varnish

Black (RAL9005)

Vibration Severity Grade (Quality of Vibration)

Level A, acc. to EN 60034-14:2004

Concentricity, run-out and alignment

according to DIN 42955, Edition 12.81 (IEC 60072-1)

Encoder	Concentricity tolerance		Concentricity and alignment tolerance	
S1, S3, M1, M3	N	---	N	---
S2, M2	---	R	---	R

Tab. 5-1: Tolerance for concentricity, run-out and alignment dependend from the encoder option

Flange

according to DIN 42948, ed. 11.65.

Output shaft, shaft end and centering hole

All motors with keyway are balanced with **complete** key. The machine element to be driven must be balanced without a key.

Shaft end cylindrical according to DIN 748, Part 3, ed. 07.75. IEC 60072 (-1).

Centering hole, according to DIN 332 Part 2, Edition 05.83

Motor	Key DIN 6885-A [1)]	Centering hole DIN 332 Part 2
MSK030	3×3×16	DS M3
MSK040	5×5 ×20	DS M5
MSK043[2)]	5×5 ×20	DS M5
MSK050	6×6×32	DS M6
MSK060	8×7×40	DS M8
MSK061	6×6×32	DS M6
MSK070	10×8×45	DS M10
MSK071	10×8×45	DS M10
MSK075 [2)]	10×8×45	DS M10
MSK076	8×7×40	DS M8
MSK100	10×8×45	DS M10
MSK101	10×8×70	DS M12
MSK103 [2)]	-	DS M12
MSK131 [2)]	14×10×80	DS M16
MSK133	-	DS M16

1) not in the scope of delivery
2) motor not availabe in ATEX design

Tab. 5-2: Key and centering hole

Specifications

5.2 MSK030 Specifications

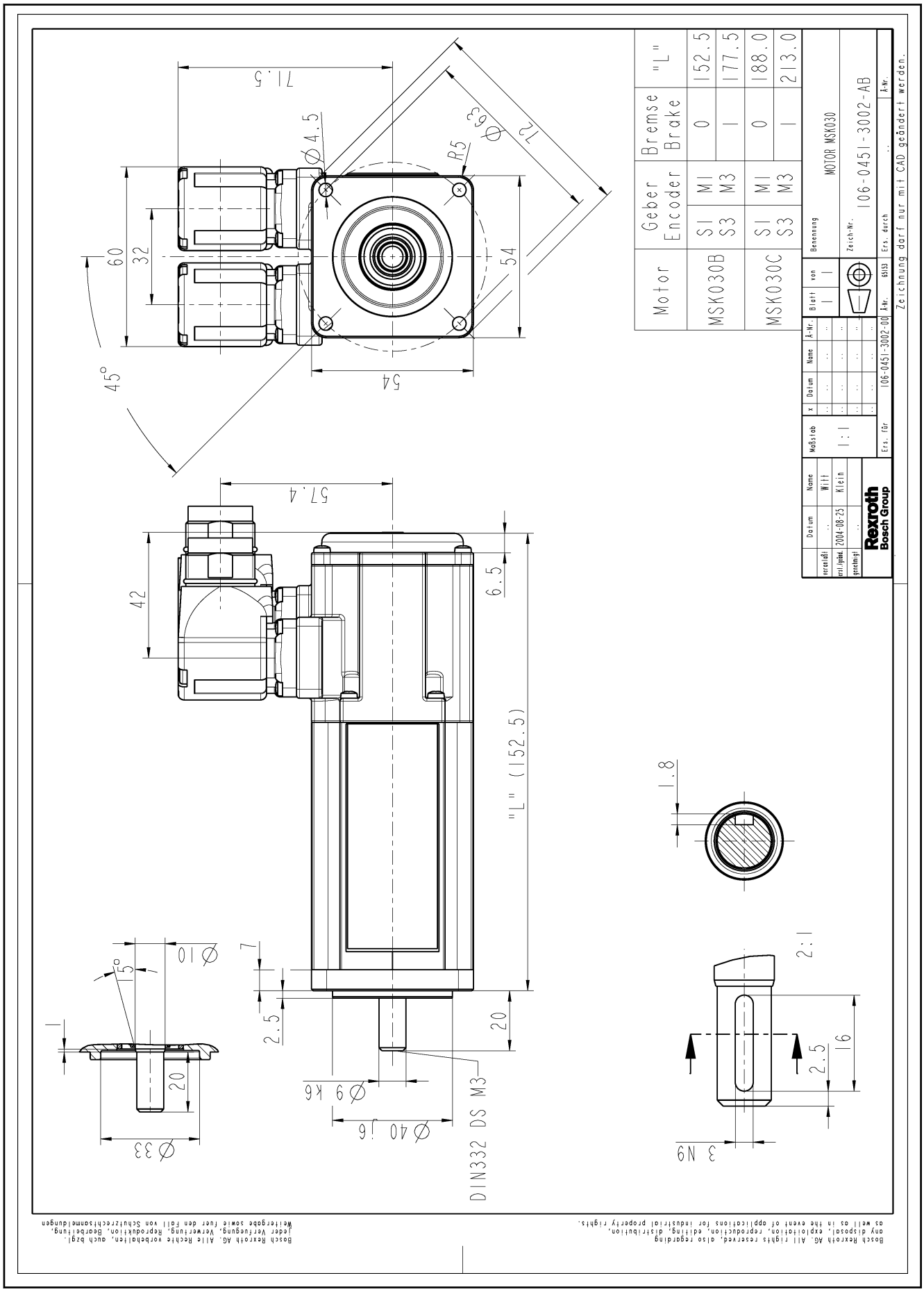

Fig. 5-1: MSK030 specification

5.3 MSK040 Specifications

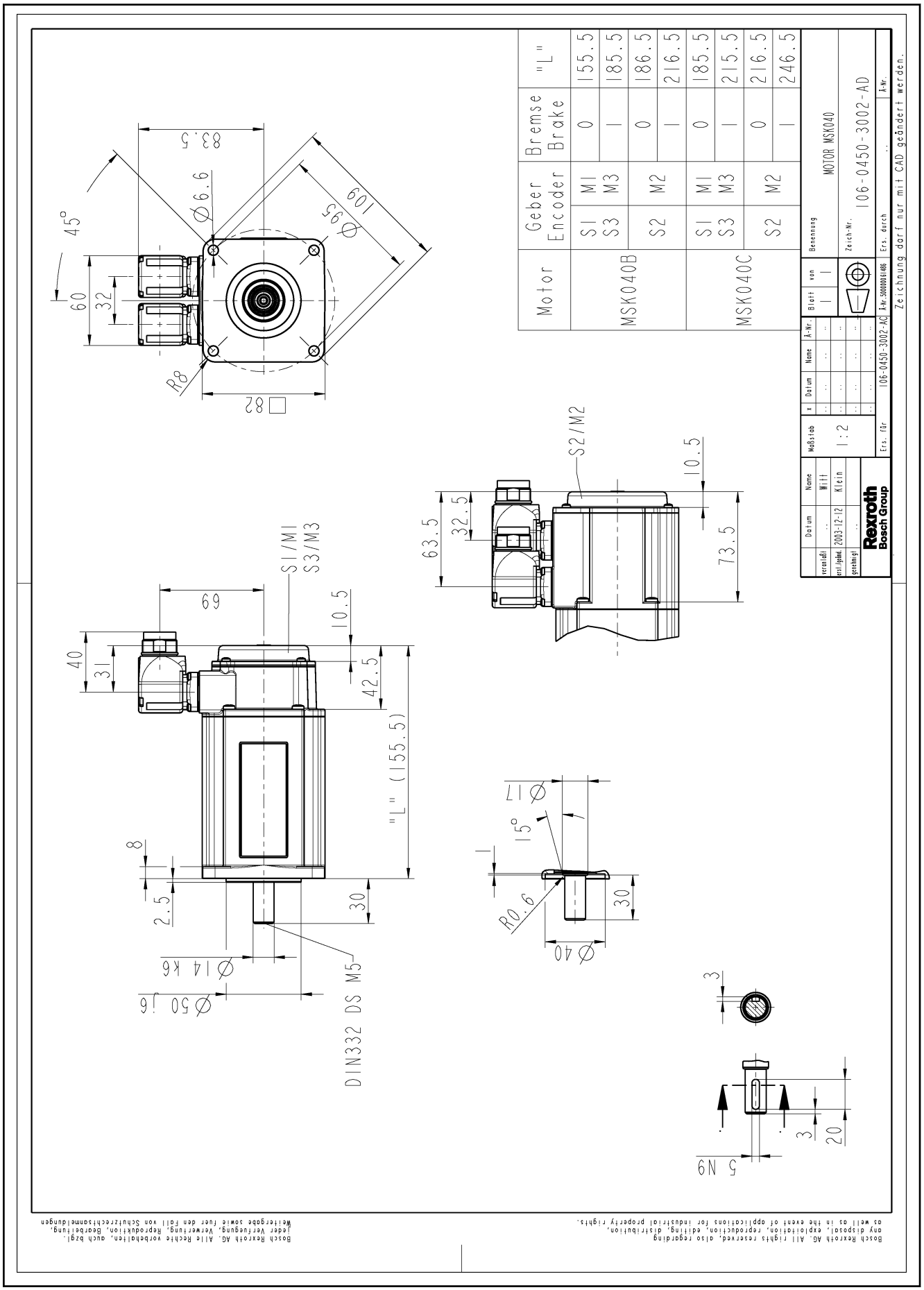

Fig. 5-2: MSK040 specification

Specifications

5.4 MSK043 Specifications

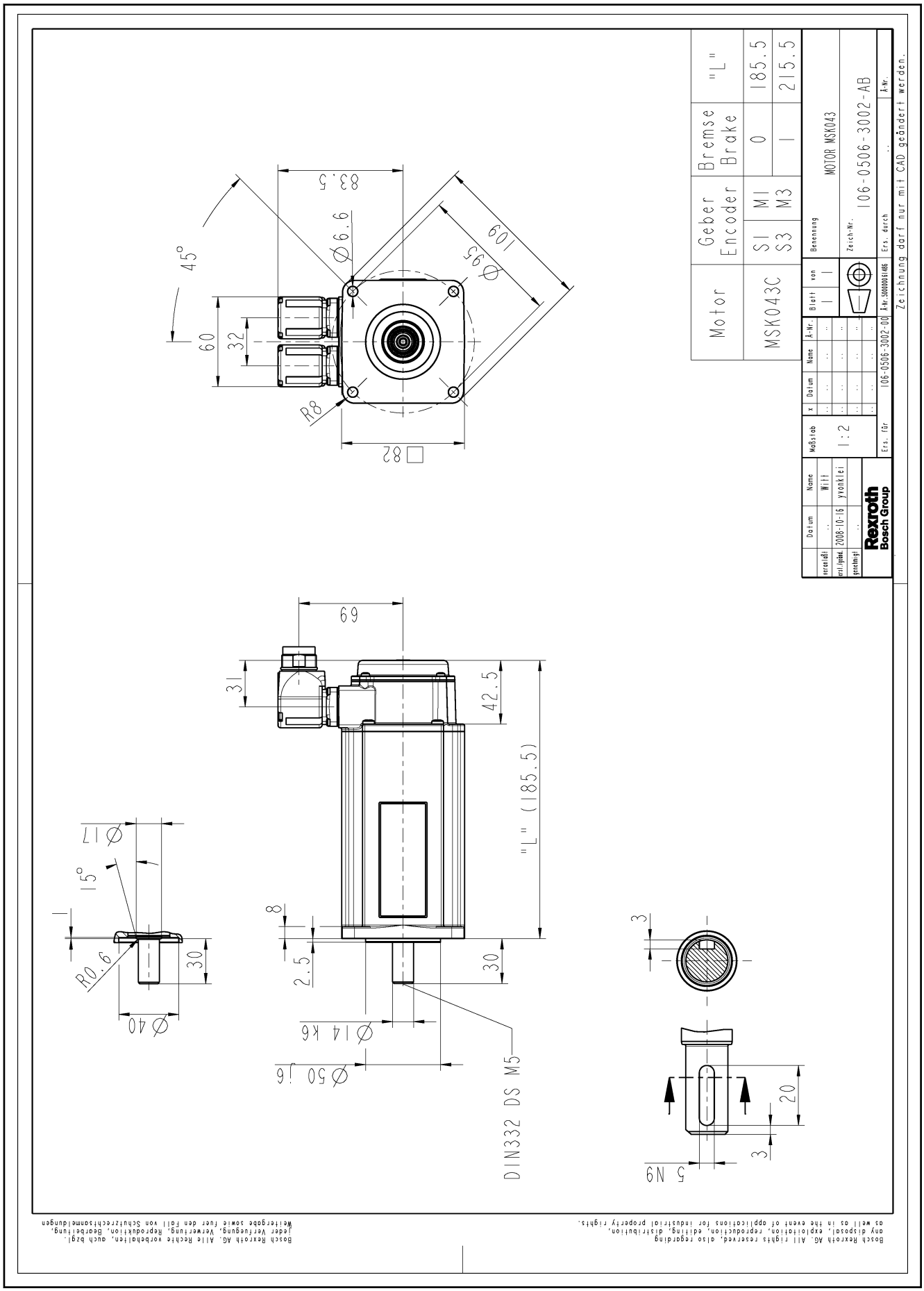

Fig. 5-3: MSK043 Specifications

5.5 MSK050 Specifications

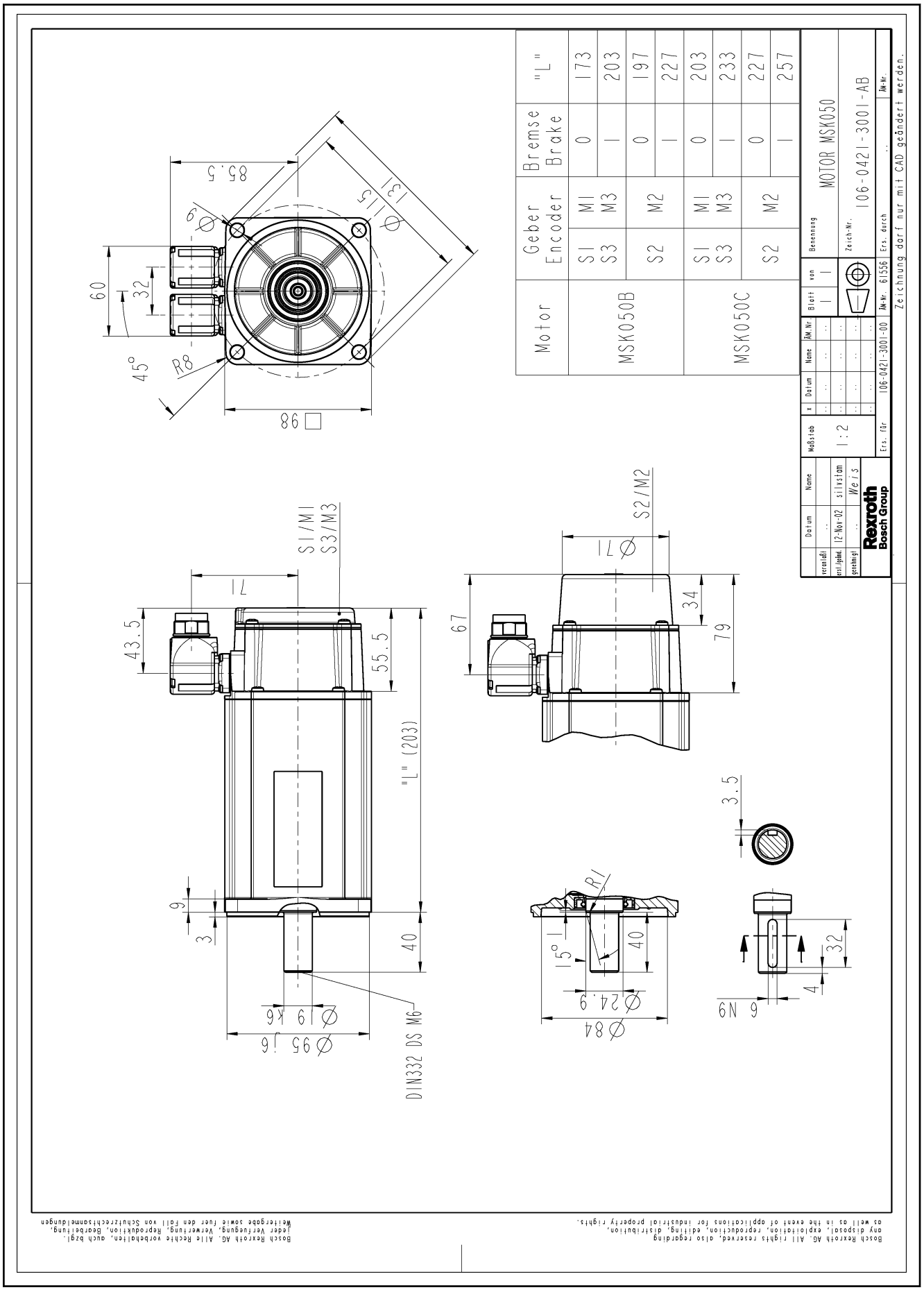

Fig. 5-4: MSK050 specification

Specifications

5.6 MSK060 Specifications

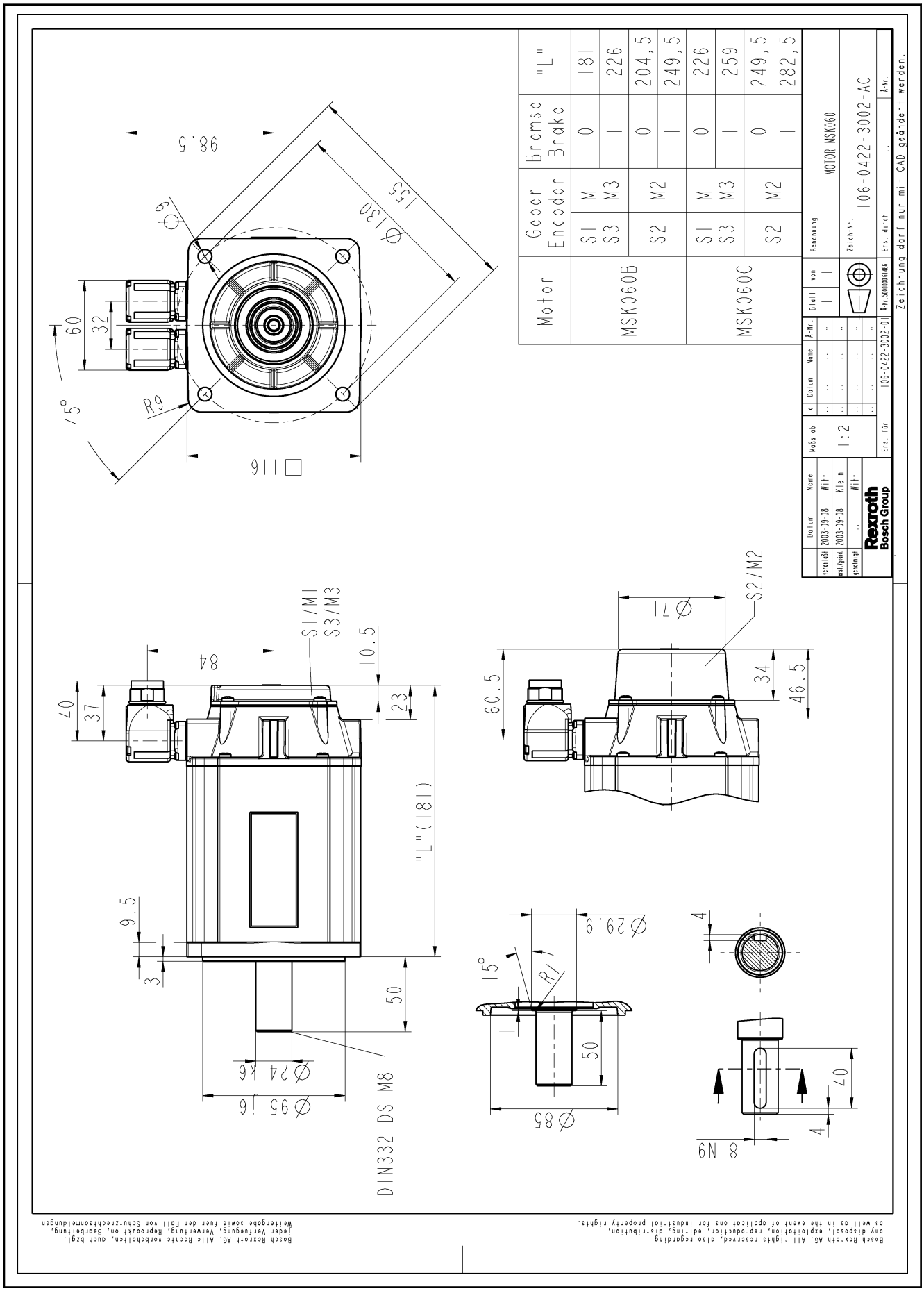

Fig. 5-5: MSK060 specification

5.7 MSK060 Specifications Fan Unit Axial

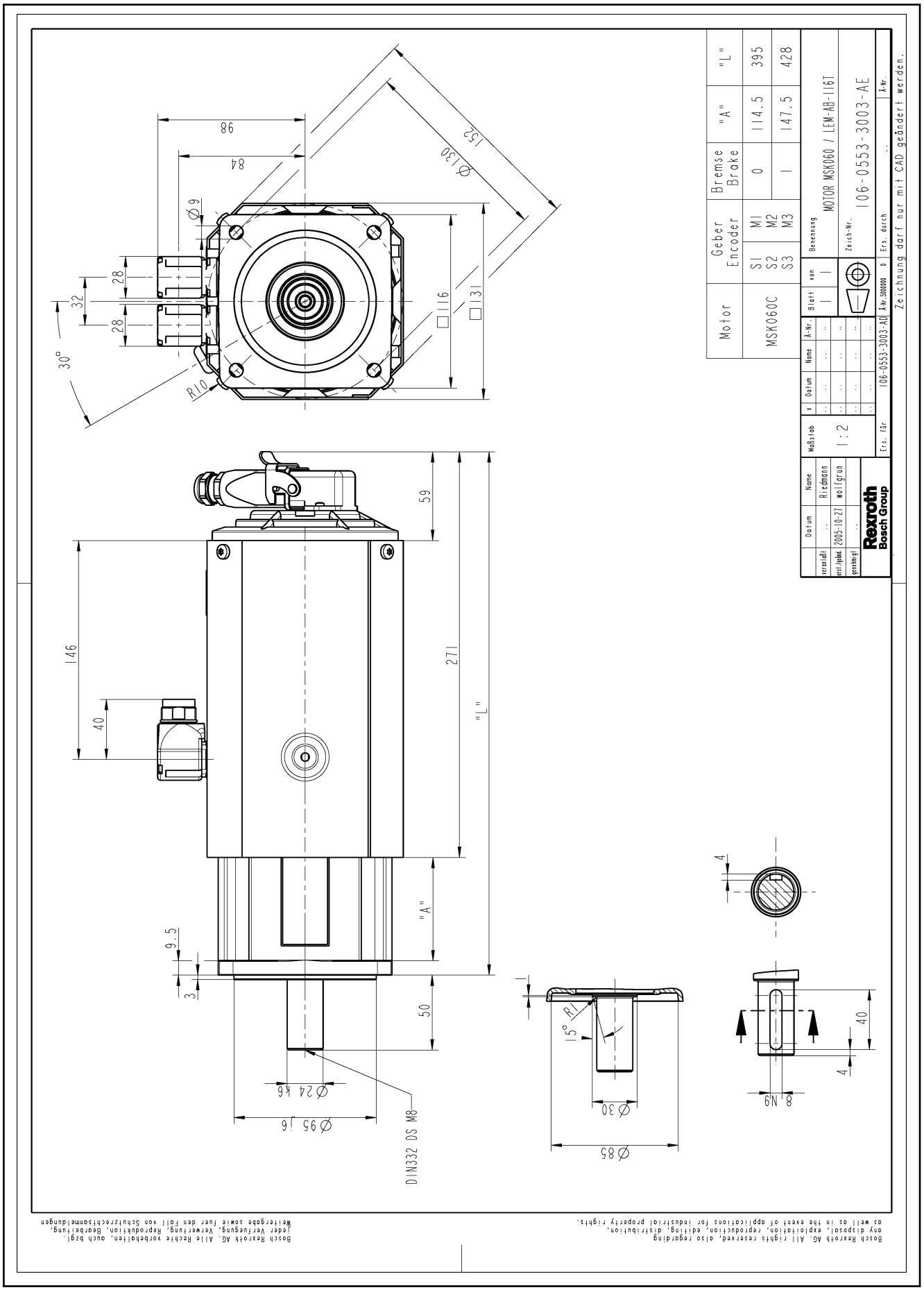

Fig. 5-6: Dimension sheet MSK060 with axial fan unit

Specifications

5.8 MSK060 Specifications Fan Unit Radial

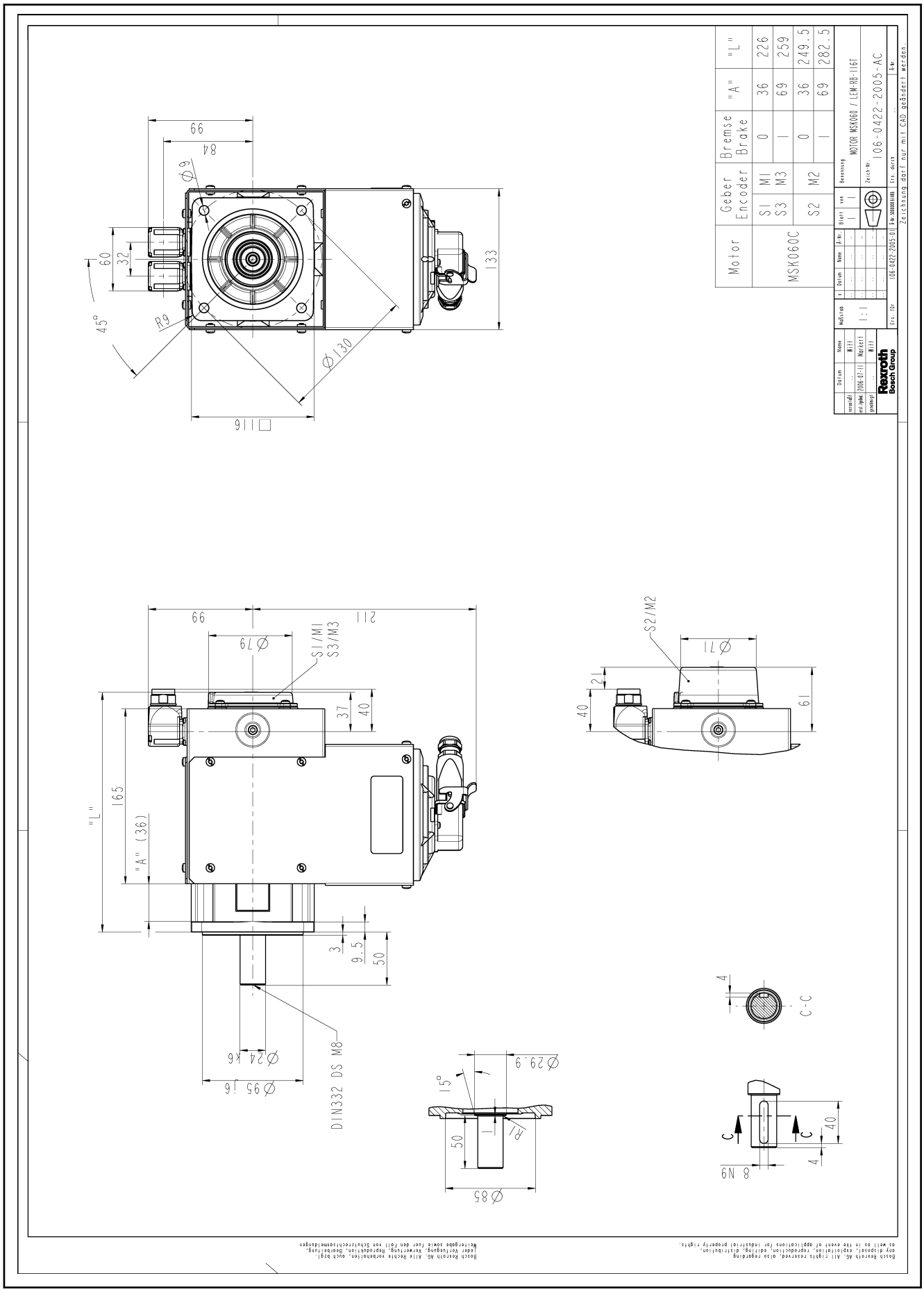

Fig. 5-7: Dimension sheet MSK060 with radial fan unit

5.9 MSK061 Specifications

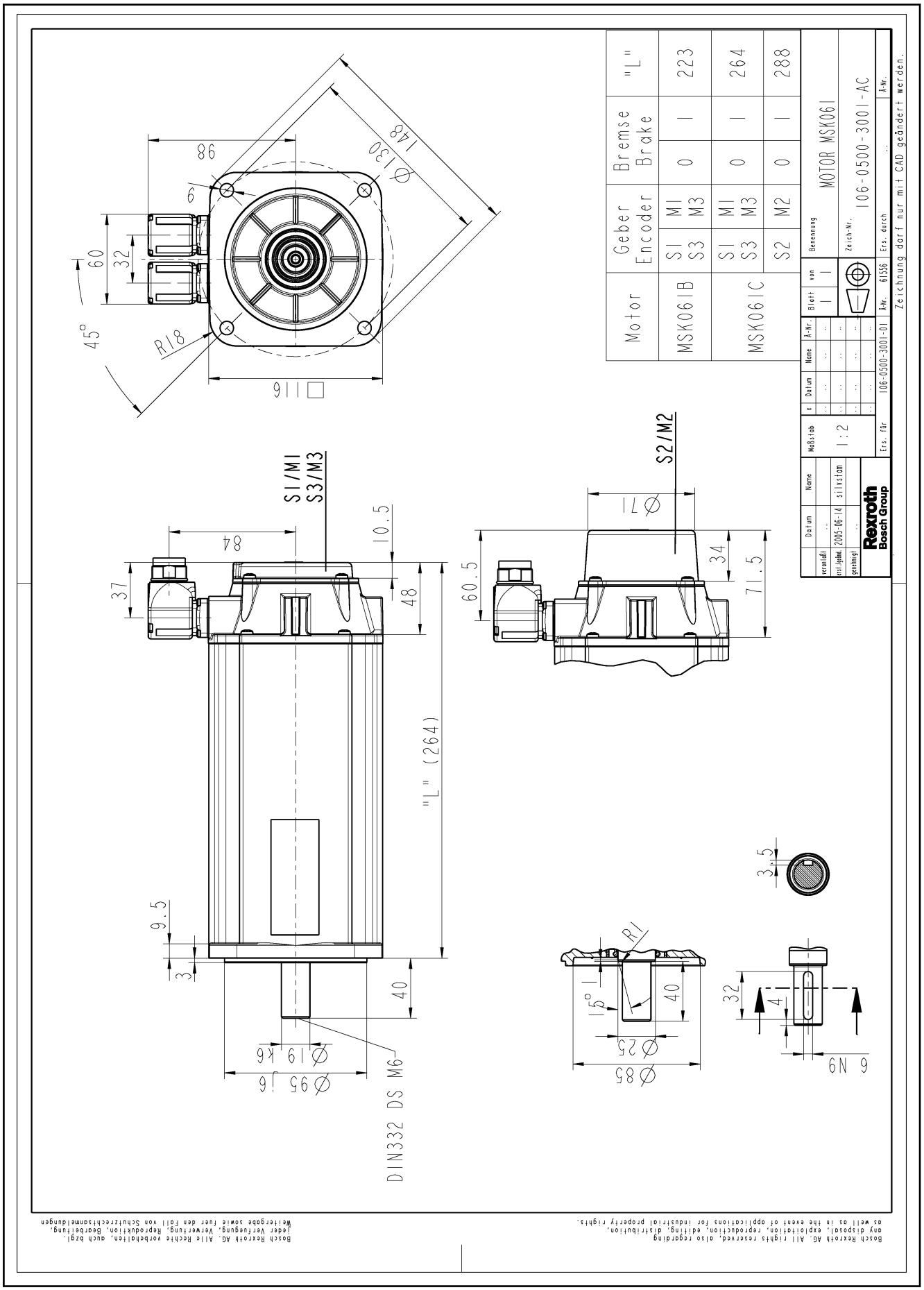

Fig. 5-8: MSK061 specification

Specifications

5.10 MSK061 Specifications Fan Unit Axial

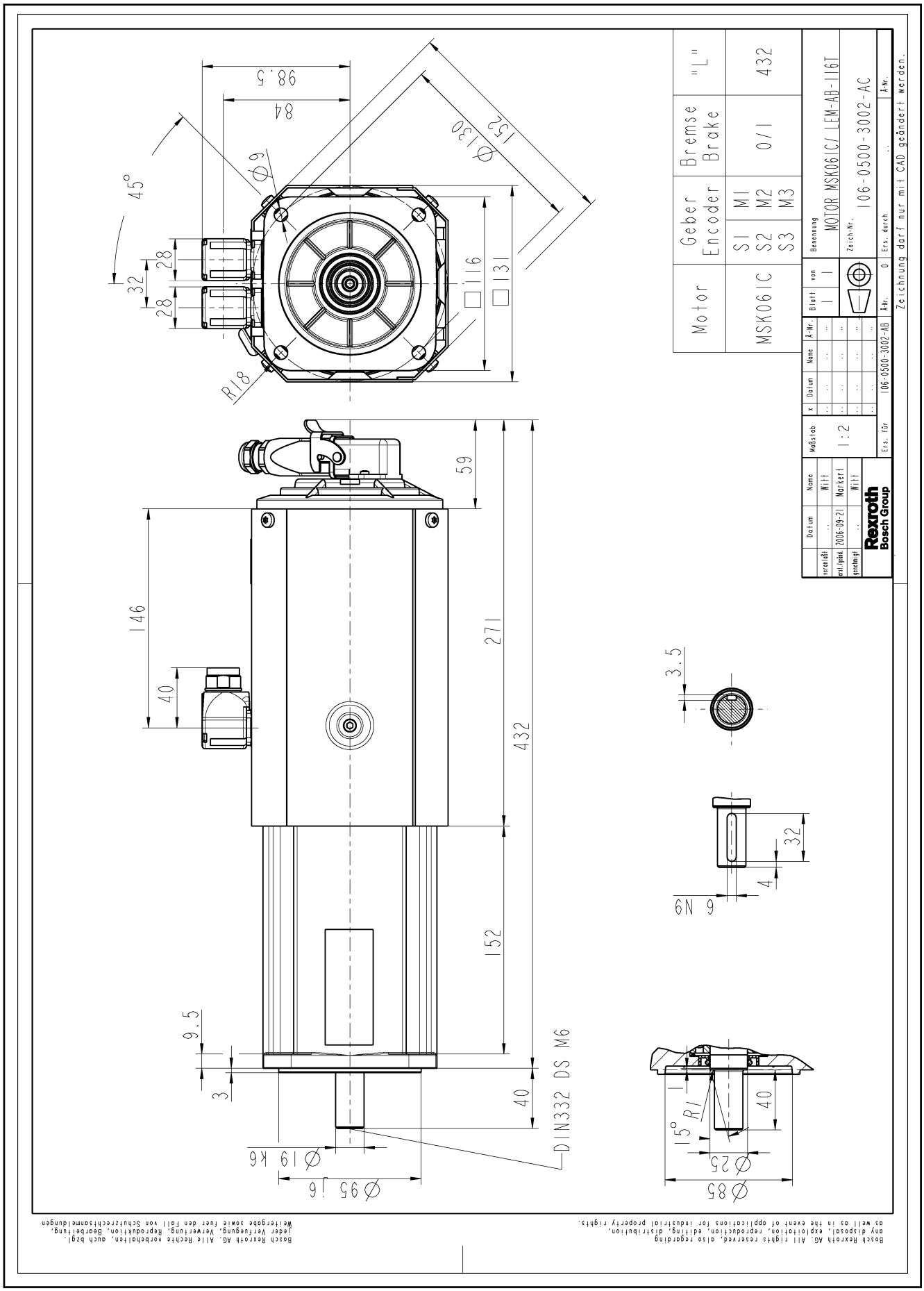

Fig. 5-9: Dimension sheet MSK061 with axial fan unit

5.11 MSK061 Specifications Fan Unit Radial

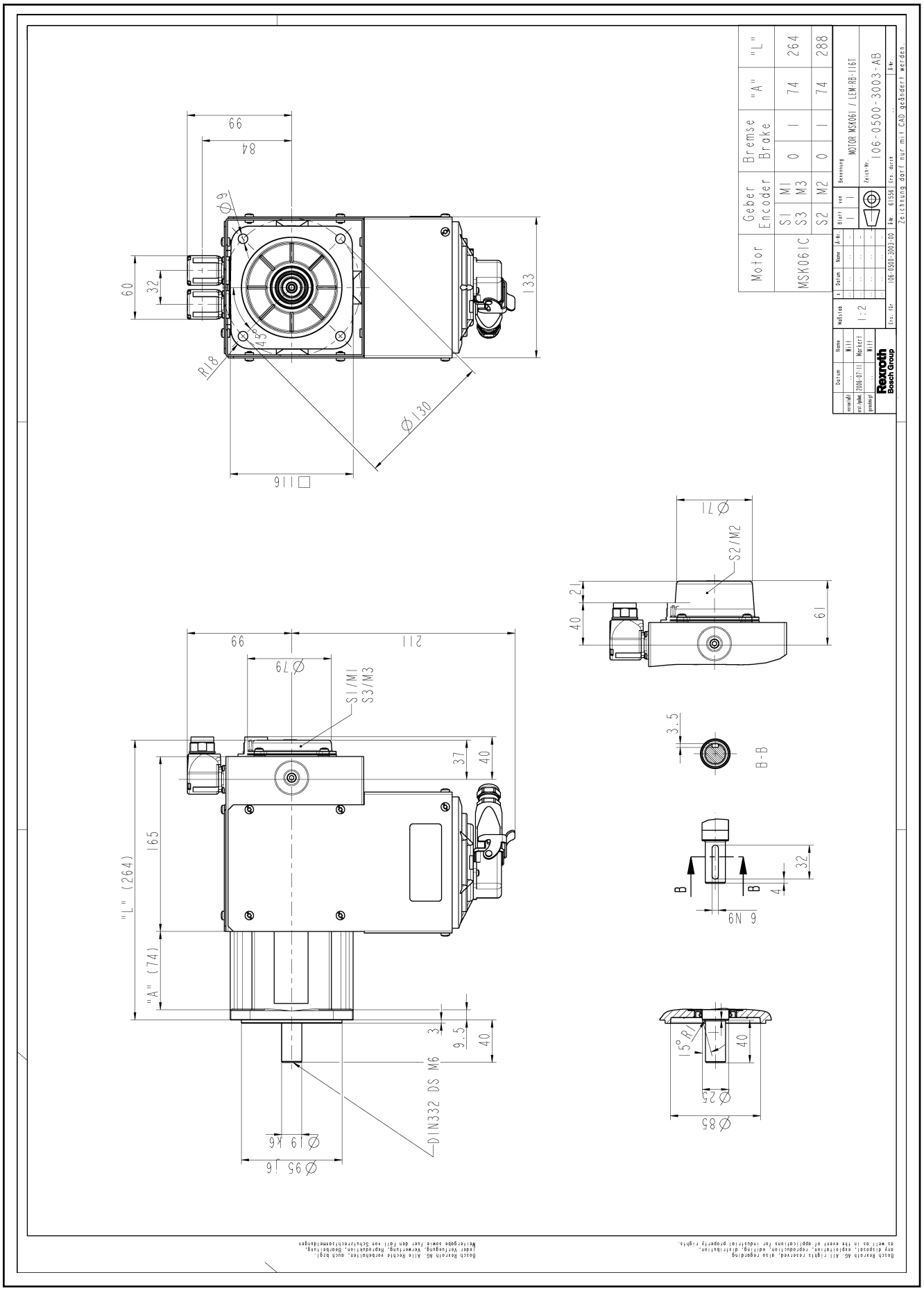

Fig. 5-10: Dimension sheet MSK061 with radial fan unit

Specifications

5.12 MSK070 Specifications

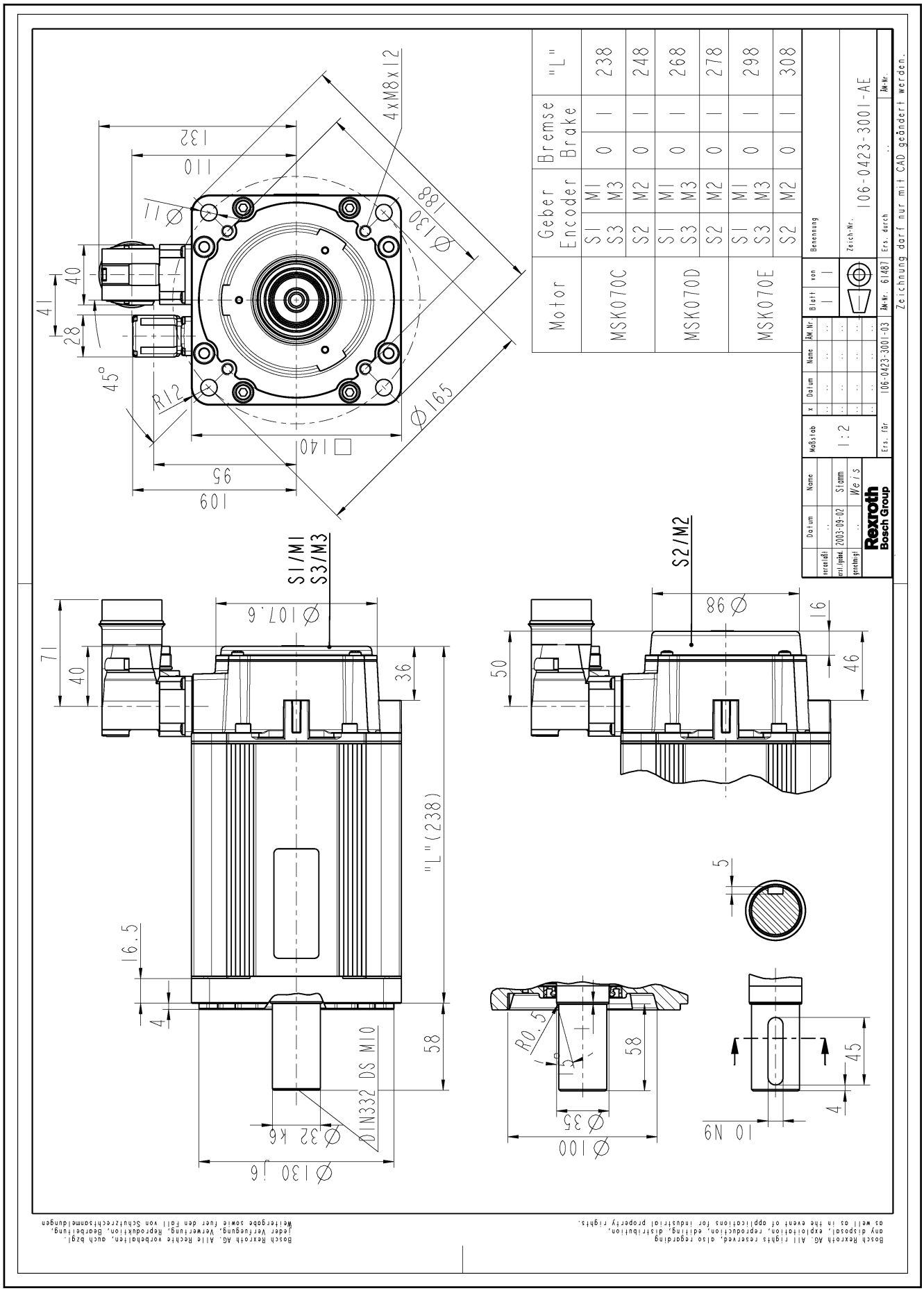

Bosch Rexroth AG. All rights reserved, also regarding any disposal, exploitation, reproduction, editing, distribution, as well as in the event of applications for industrial property rights.
Bosch Rexroth AG. Alle Rechte vorbehalten, auch bzgl. jeder Verfügung, Verwertung, Reproduktion, Bearbeitung, Weitergabe sowie für den Fall von Schutzrechtsanmeldungen

Fig. 5-11: MSK070 specification

5.13 MSK070 Specifications Fan Unit Axial

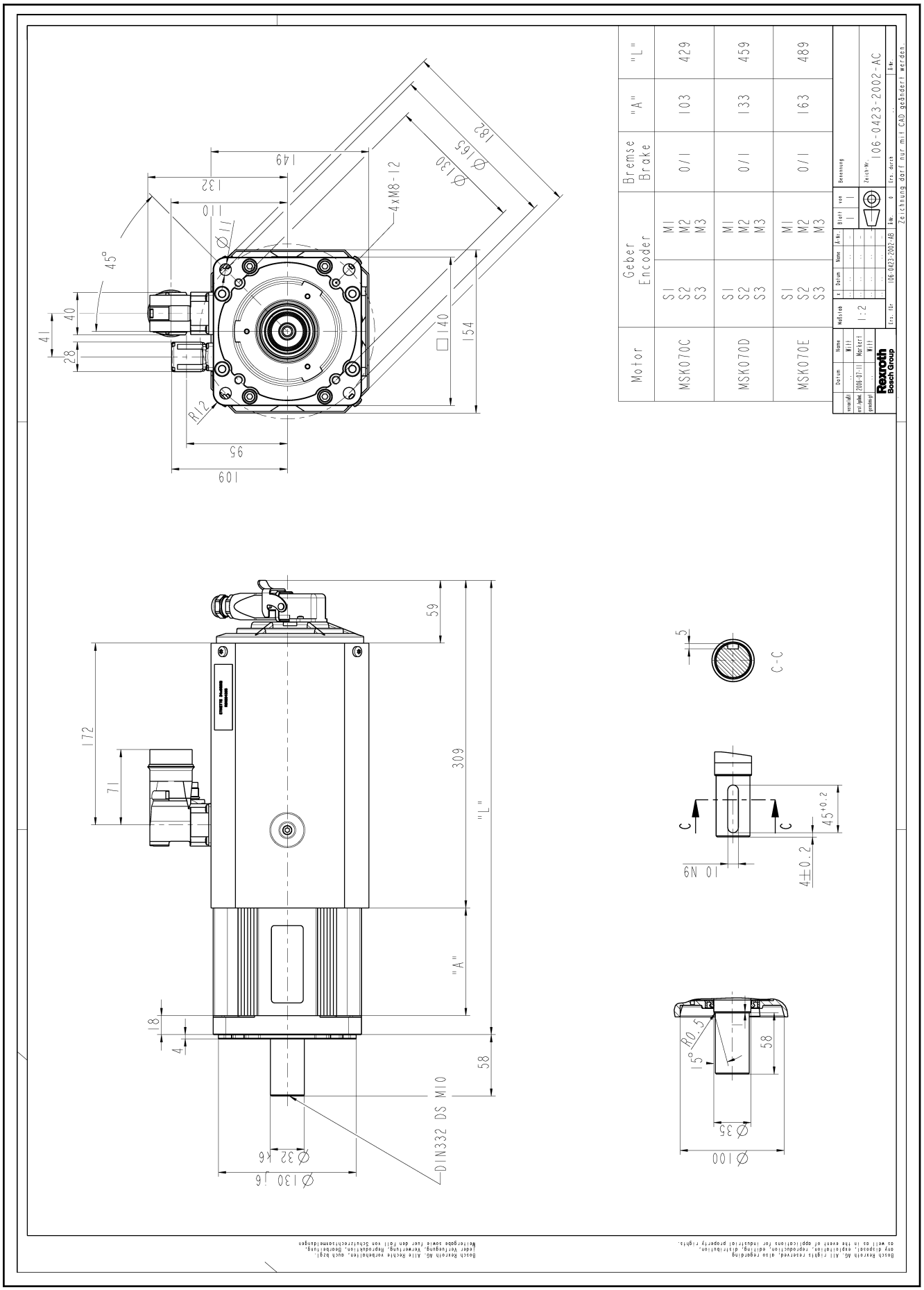

Fig. 5-12: Dimension sheet MSK070 with axial fan unit

Specifications

5.14 MSK070 Specifications Fan Unit Radial

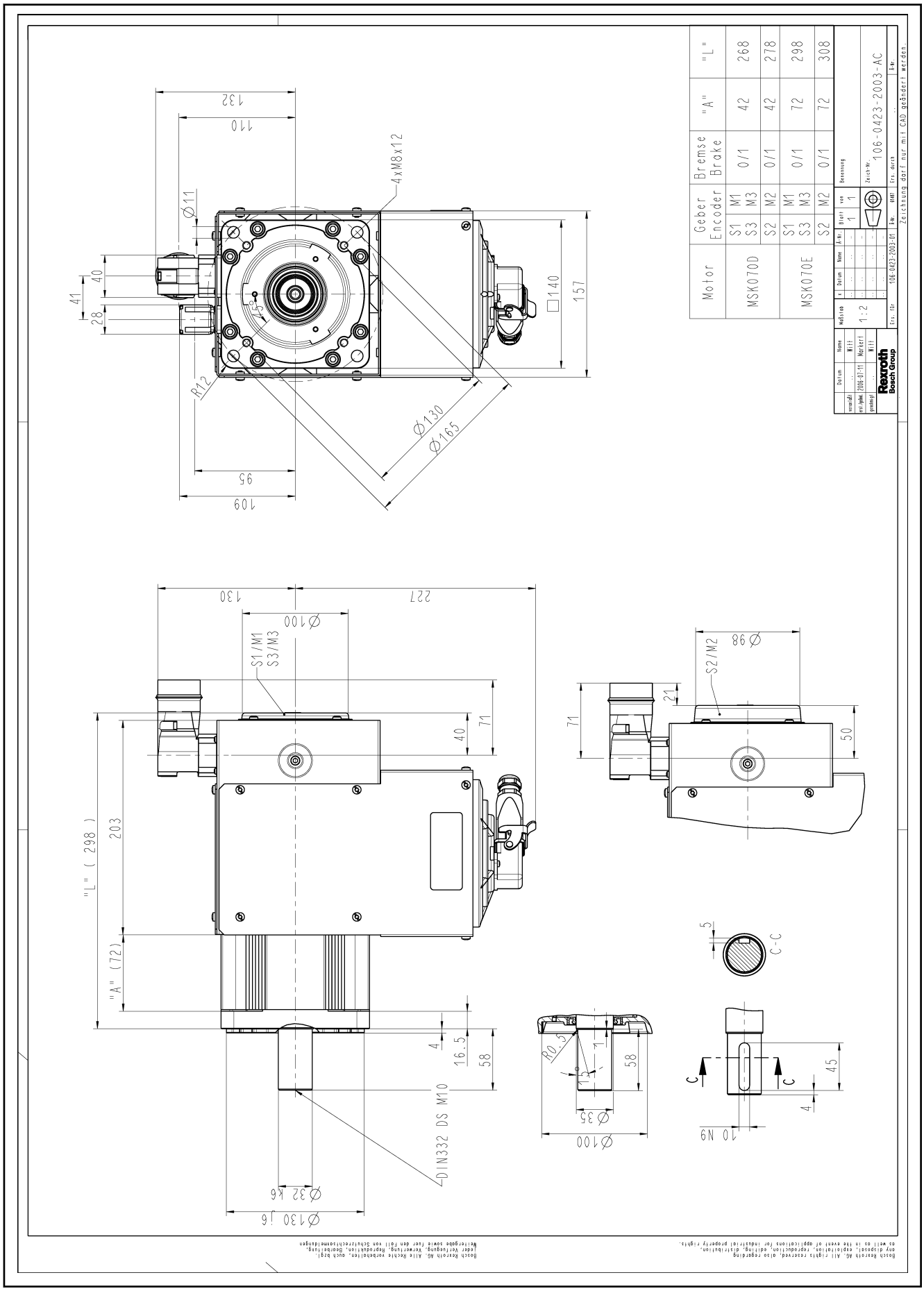

Fig. 5-13: Dimension sheet MSK070 with radial fan unit

5.15 MSK071 Specifications

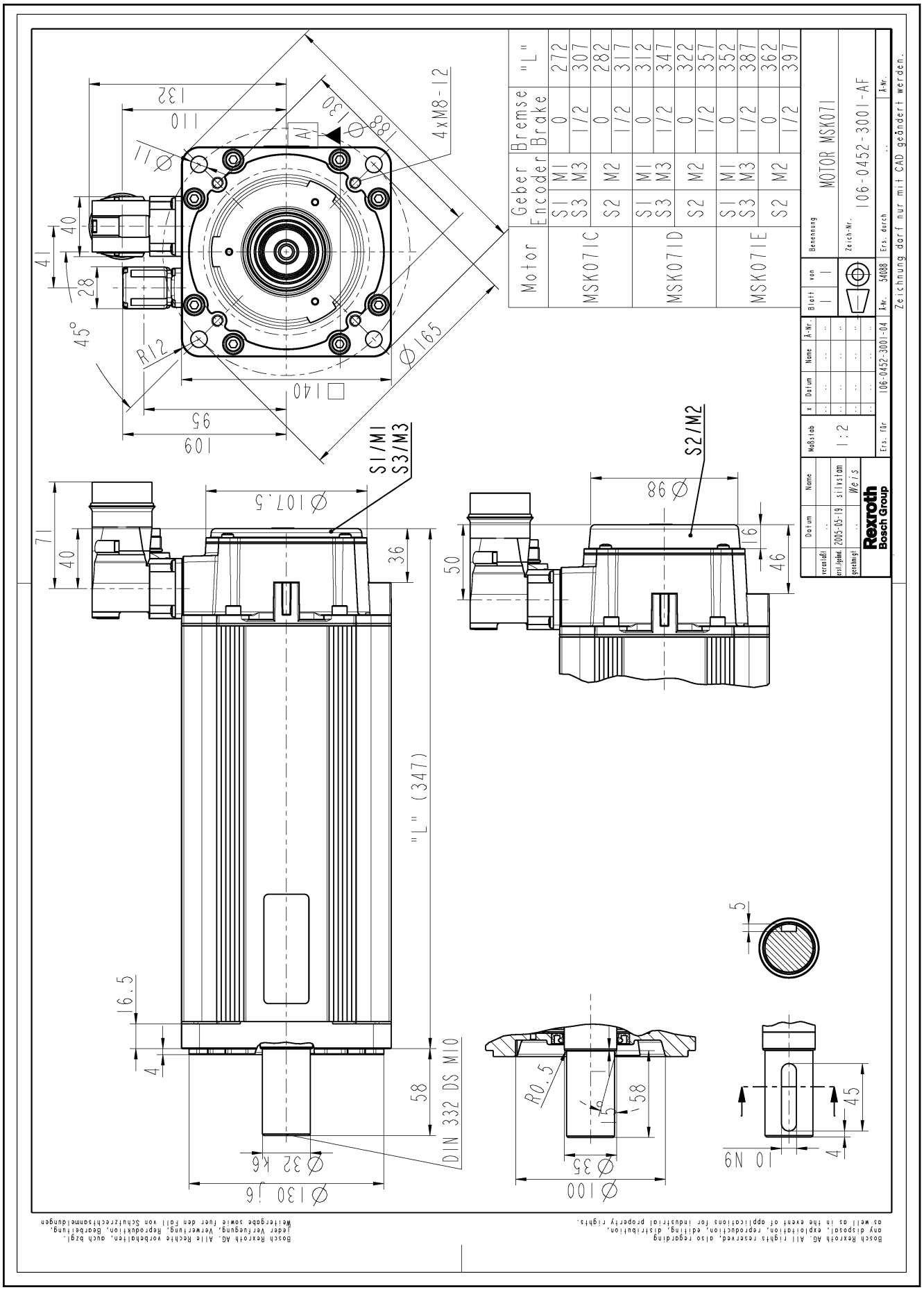

Fig. 5-14: MSK071...NN specification

Specifications

5.16 MSK071 Specifications Liquid Cooling

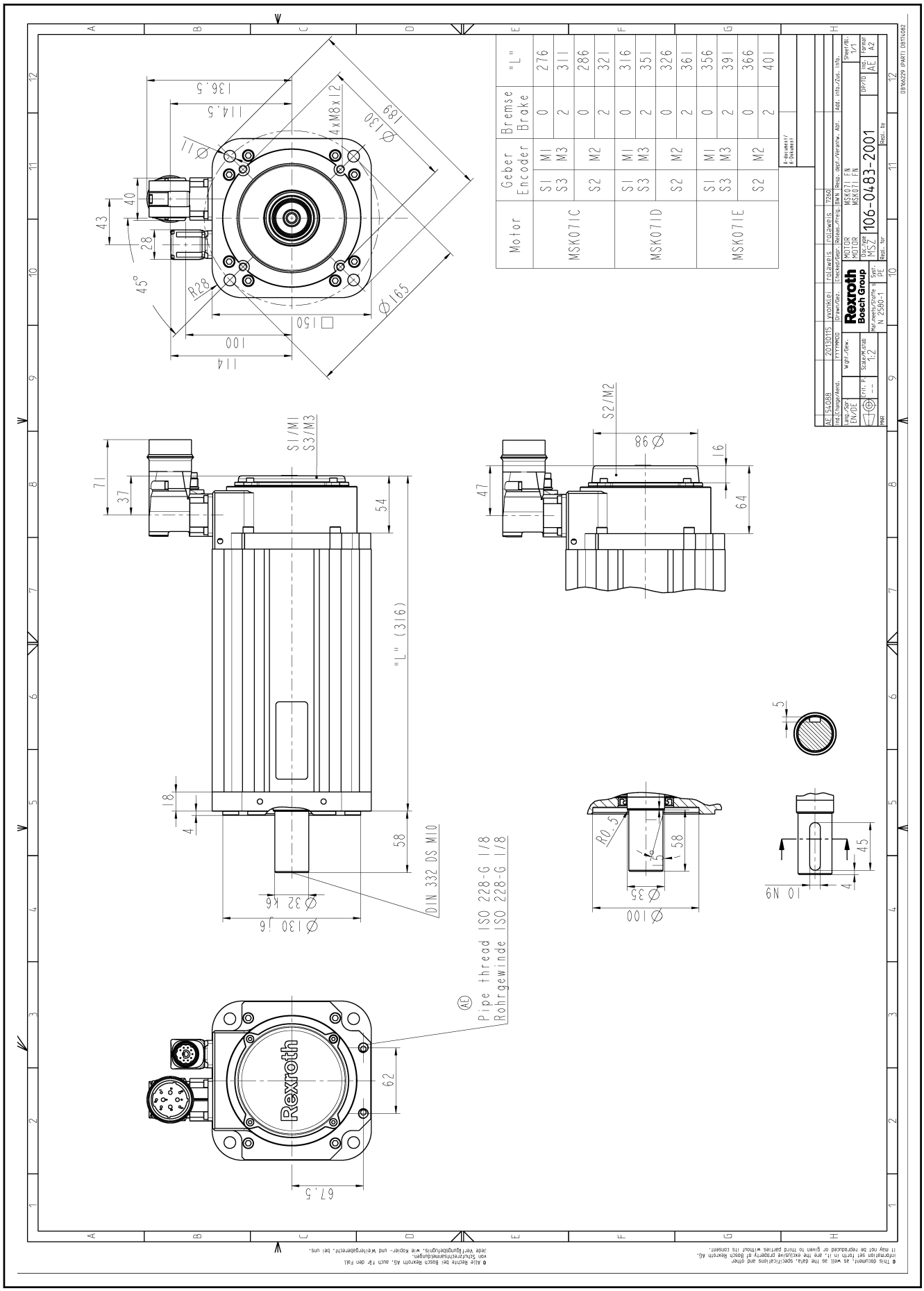

Fig. 5-15: MSK071...FN specification

5.17 MSK071 Specifications Fan Unit Axial

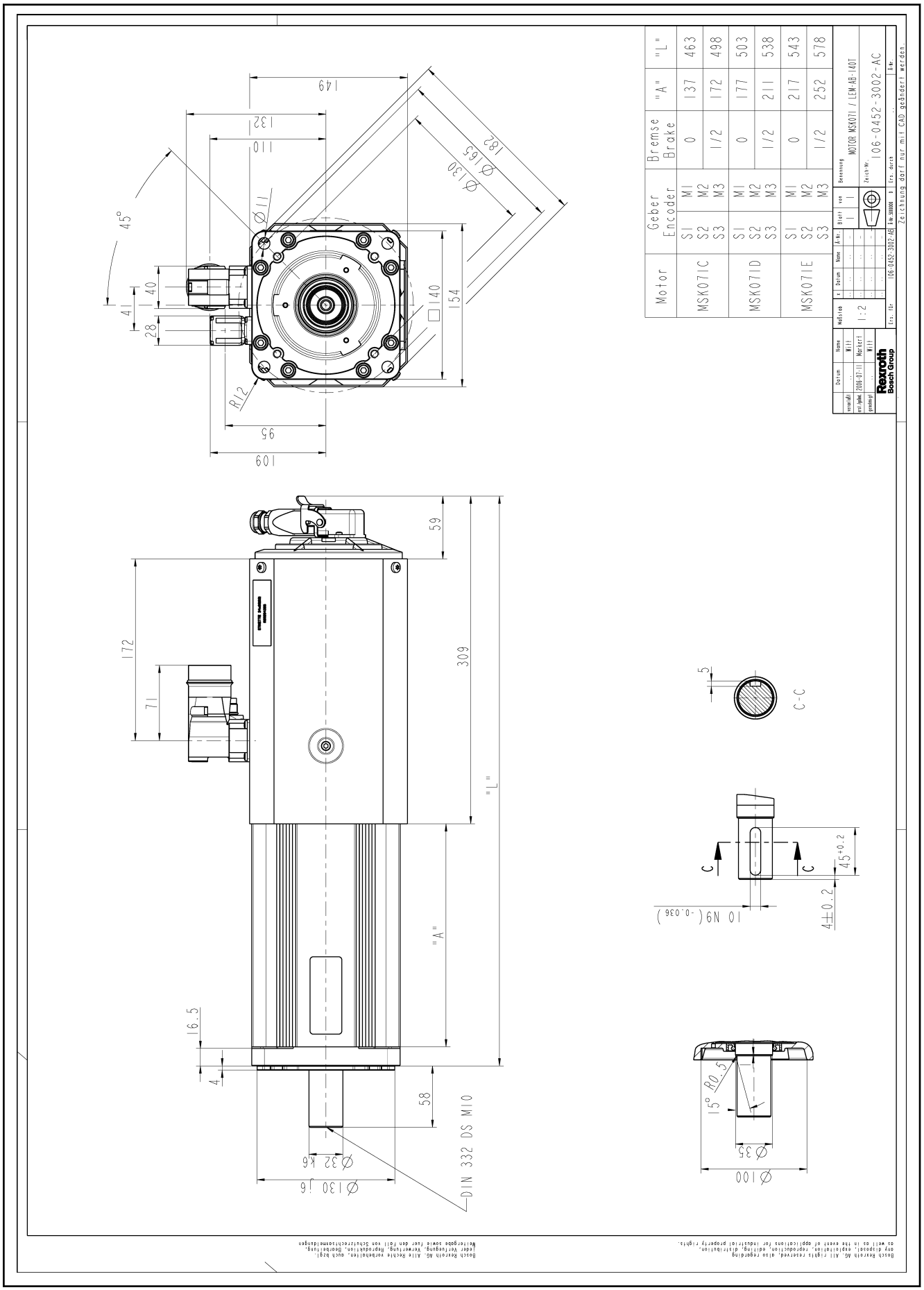

Fig. 5-16: Dimension sheet MSK071 with axial fan unit

Specifications

5.18 MSK071 Specifications Fan Unit Radial

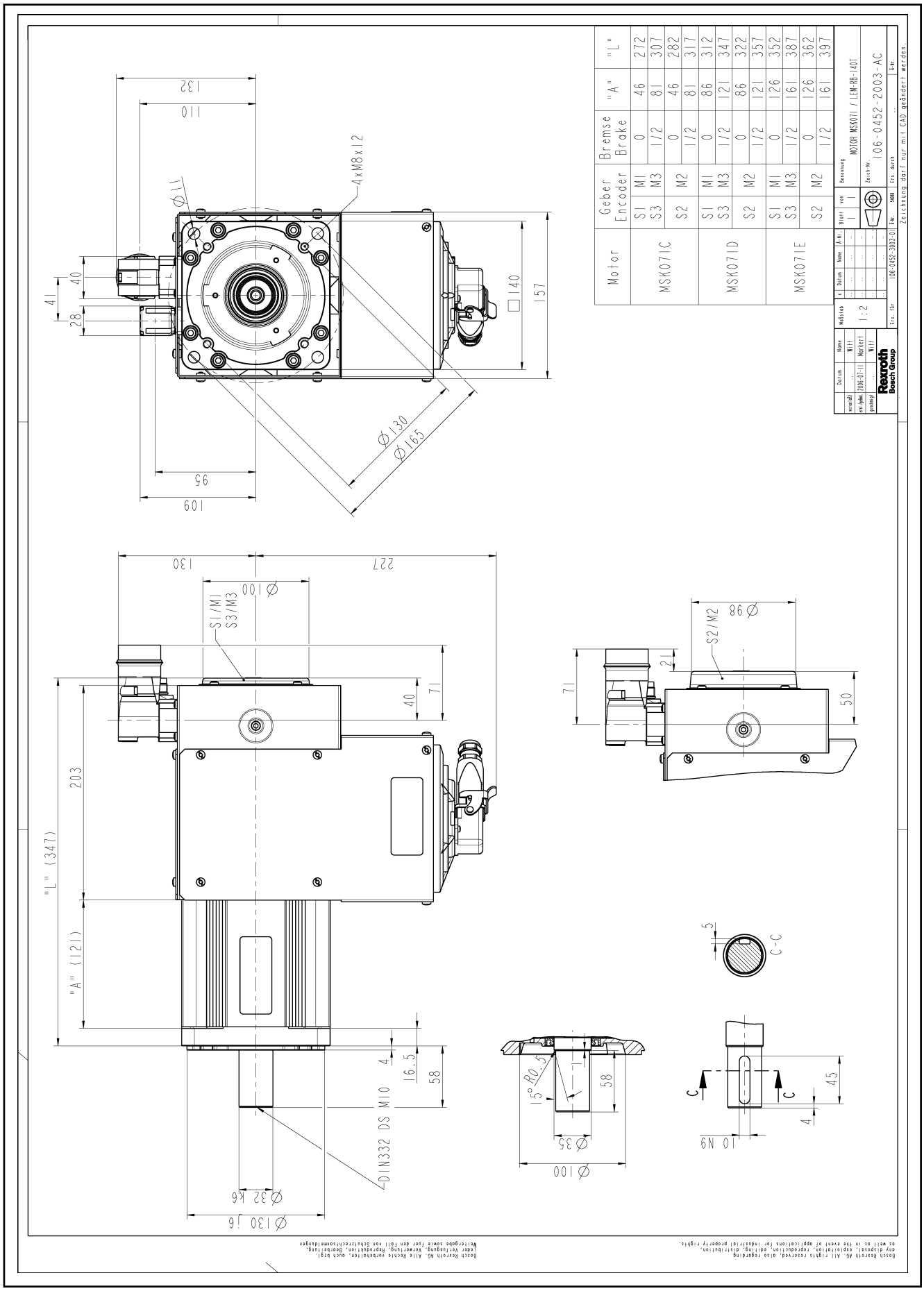

Fig. 5-17: Dimension sheet MSK071 with radial fan unit

5.19 MSK075 Specifications

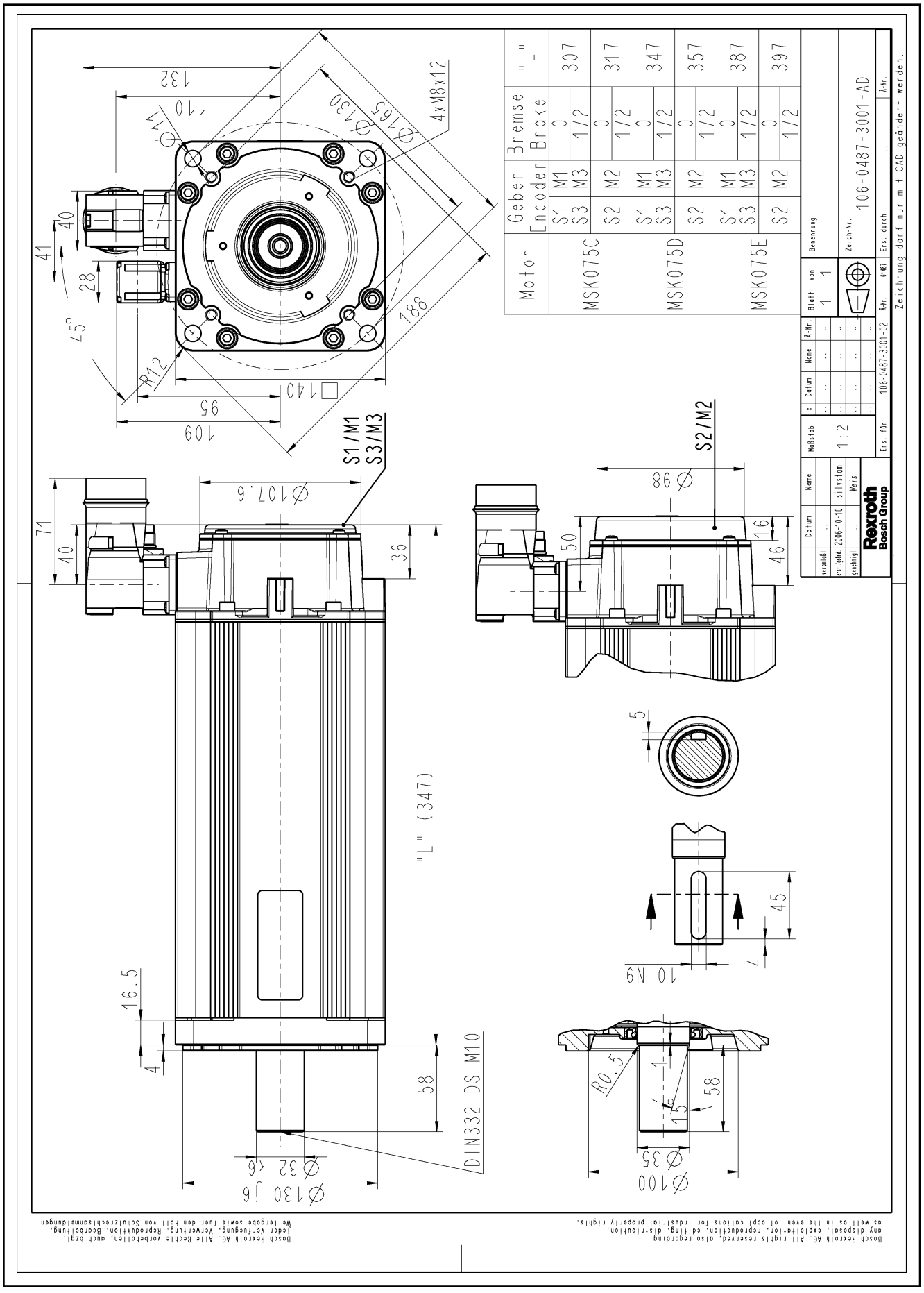

Fig. 5-18: MSK075...NN specification

Specifications

5.20 MSK075 Specifications Liquid Cooling

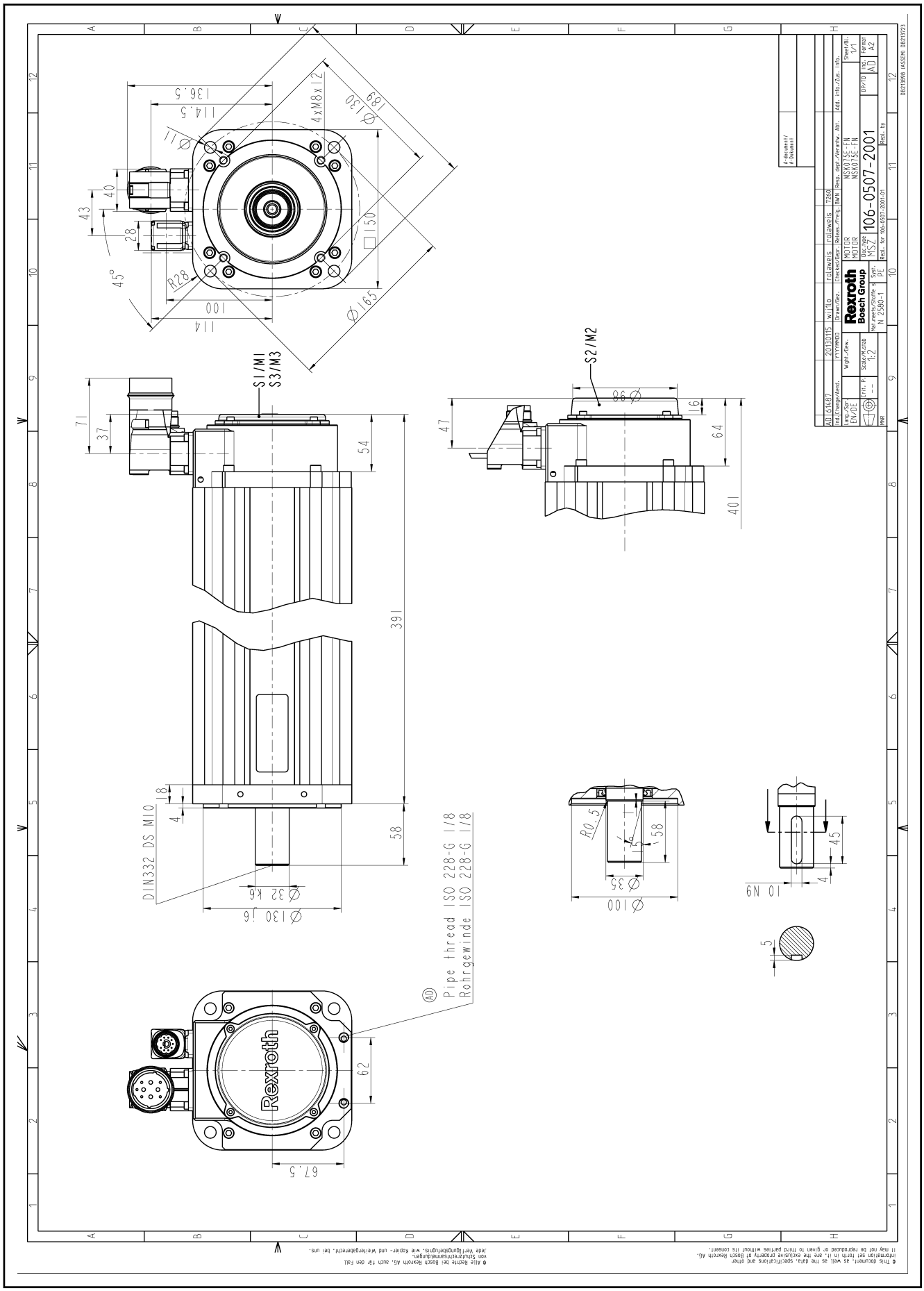

Fig. 5-19: MSK075...FN specification

5.21 MSK075 Specifications Fan Unit Axial

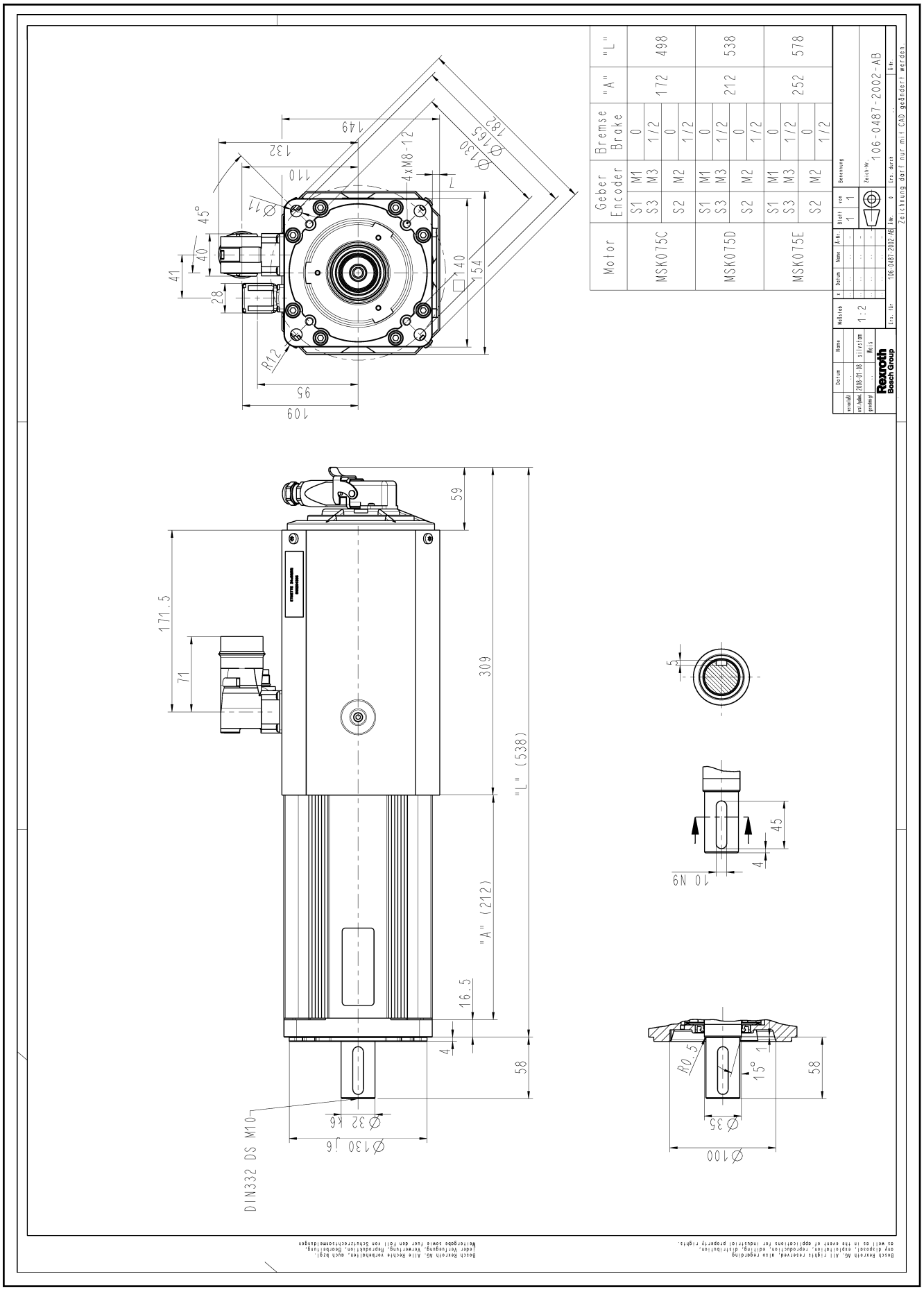

Fig. 5-20: Dimension sheet MSK075 with axial fan unit

Specifications

5.22 MSK075 Specifications Fan Unit Radial

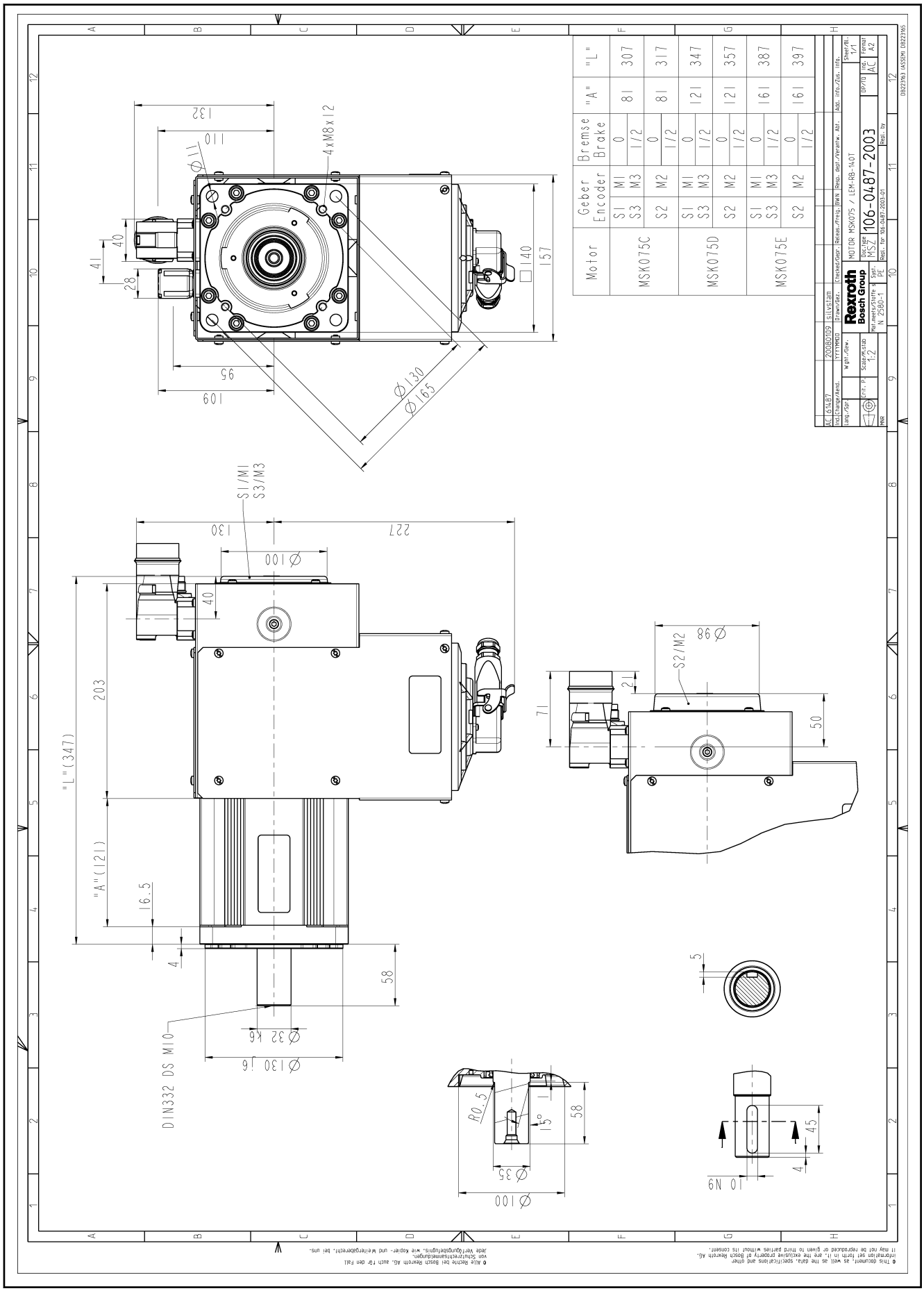

Fig. 5-21: Dimension sheet MSK075 with radial fan unit

5.23 MSK076 Specifications

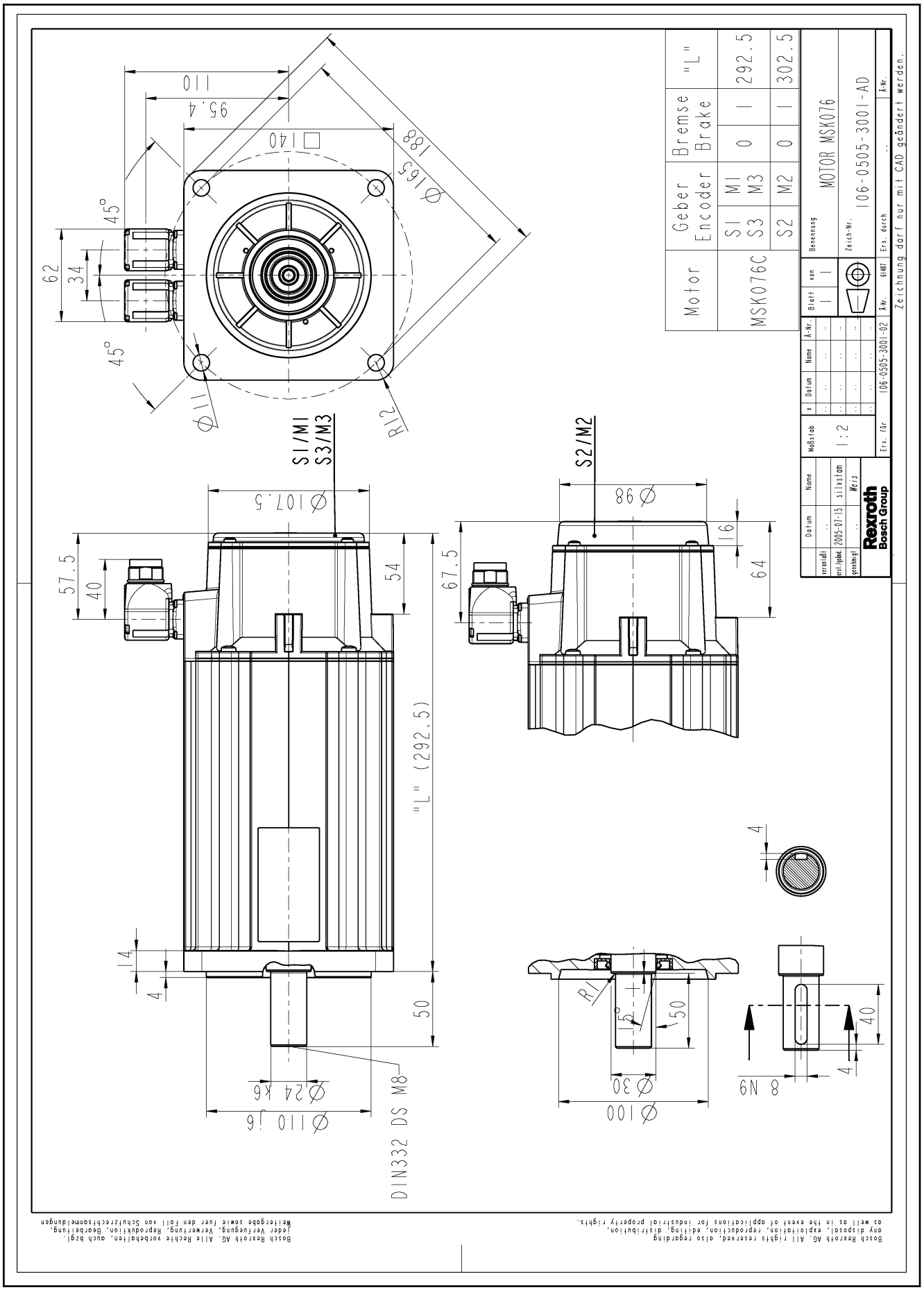

Fig. 5-22: MSK076 specification

Specifications

5.24 MSK076 Specifications Fan Unit Axial

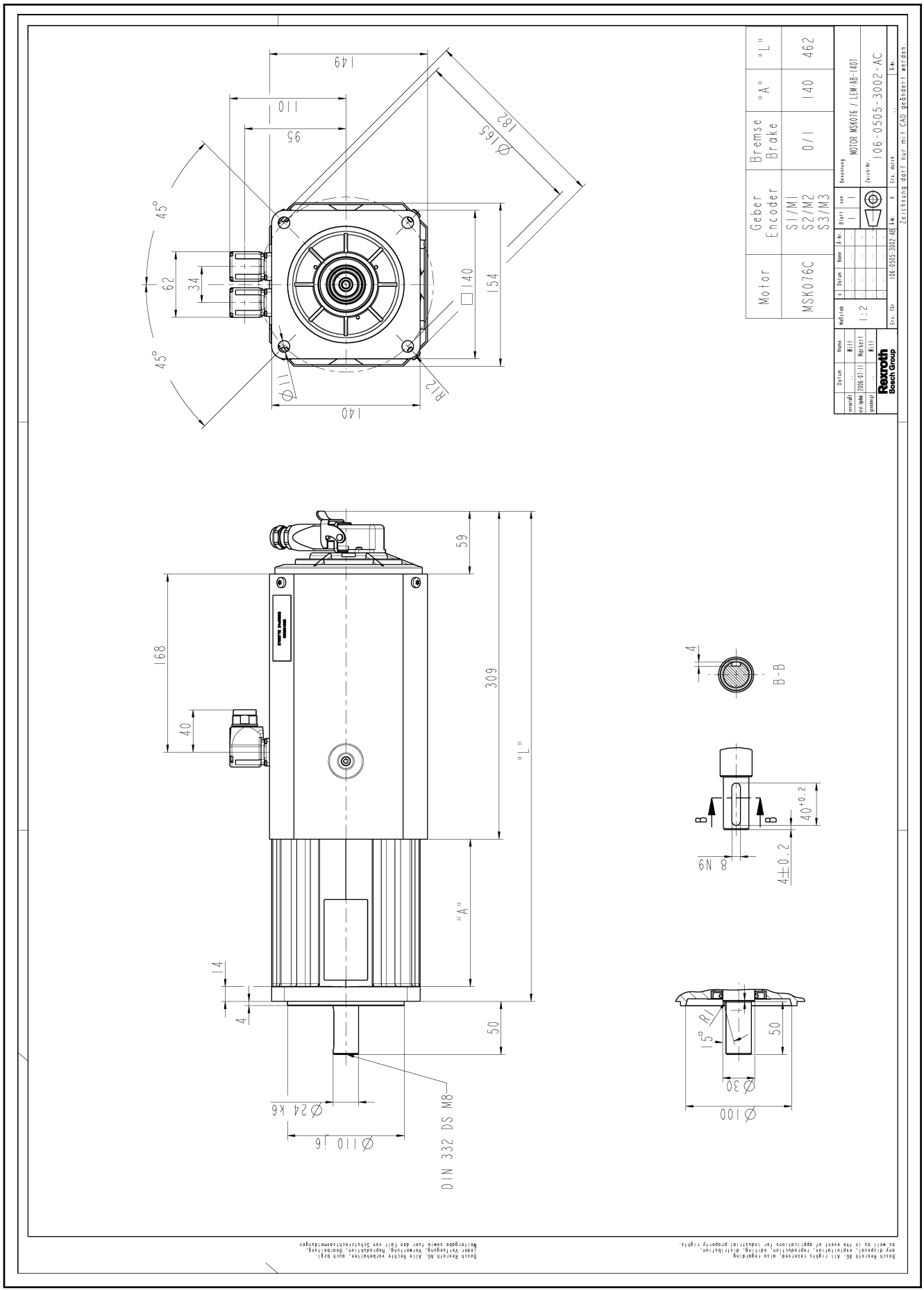

Fig. 5-23: Dimension sheet MSK076 with axial fan unit

5.25 MSK076 Specifications Fan Unit Radial

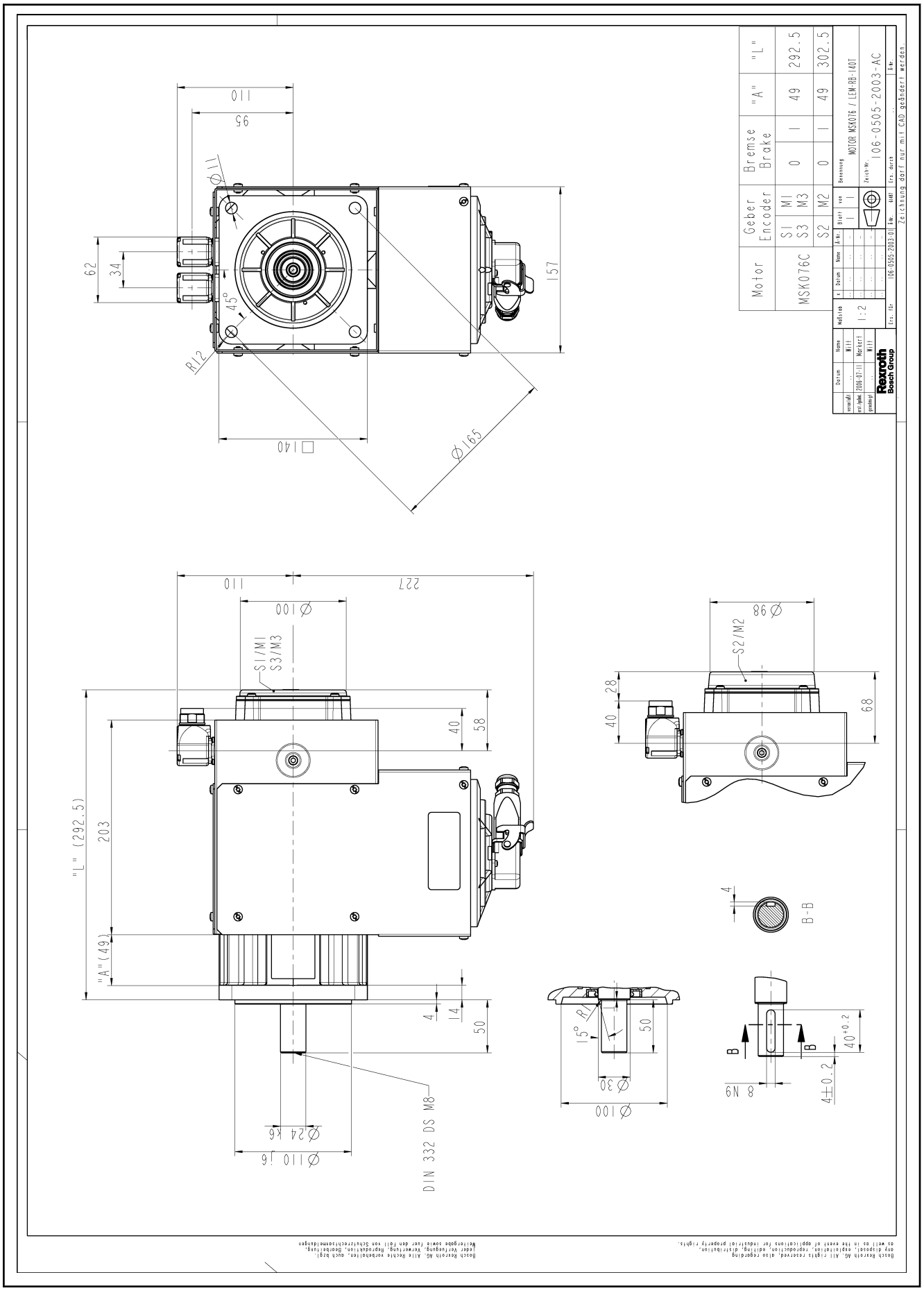

Fig. 5-24: Dimension sheet MSK076 with radial fan unit

Specifications

5.26 MSK100 Specifications

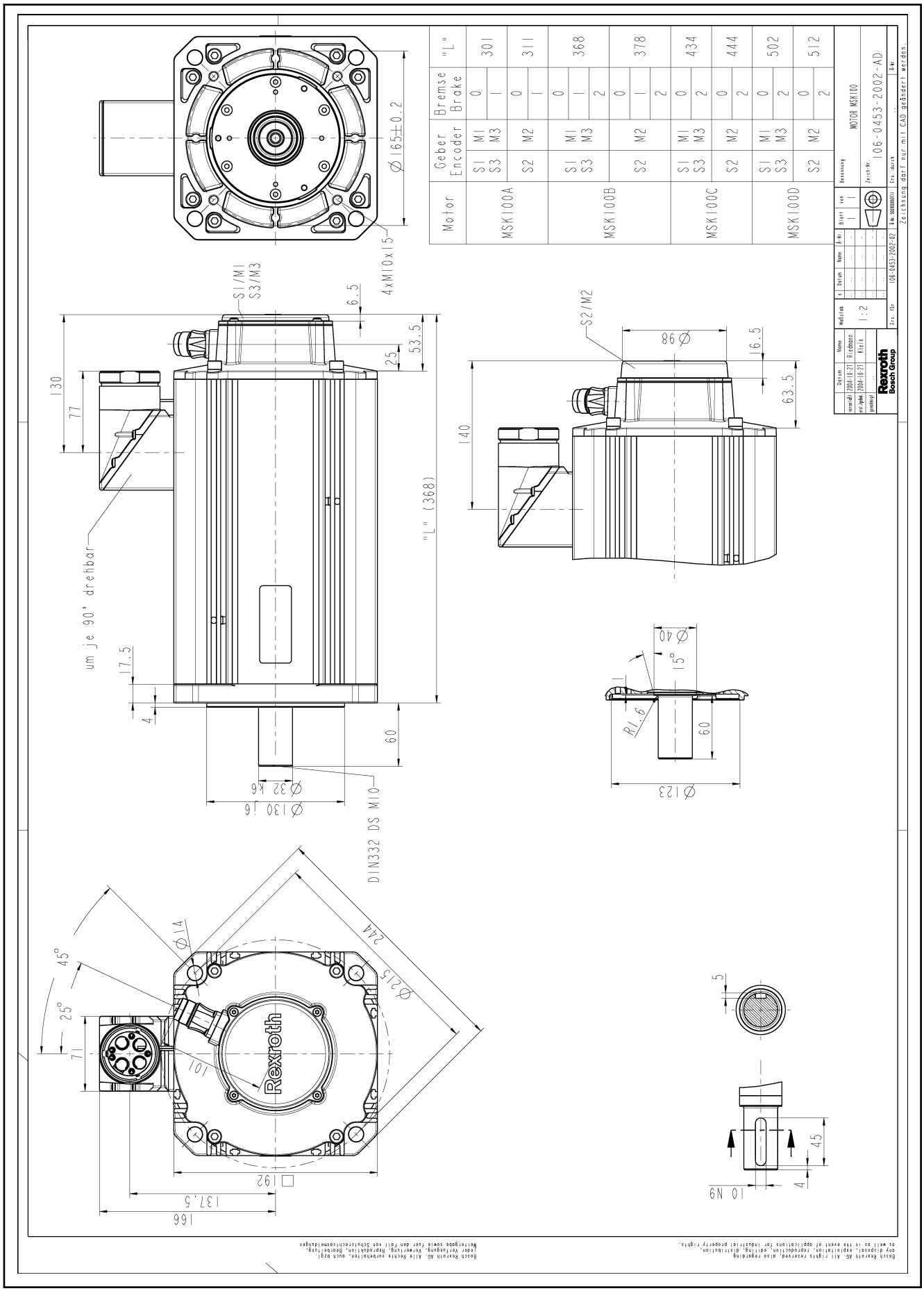

Fig. 5-25: MSK100 specification

5.27 MSK100 Specifications Fan Unit Axial

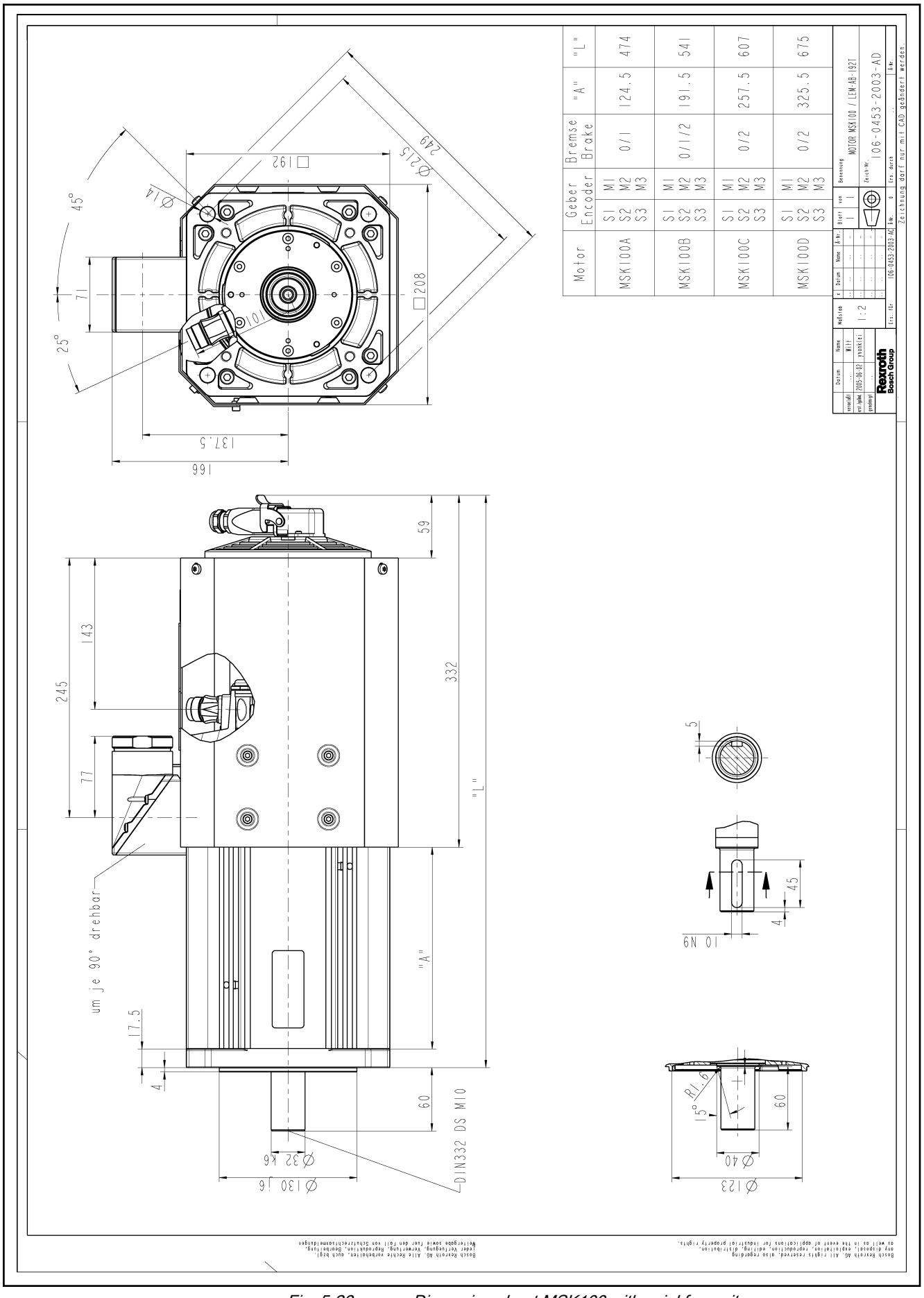

Fig. 5-26: Dimension sheet MSK100 with axial fan unit

Specifications

5.28 MSK100 Specifications Fan Unit Radial

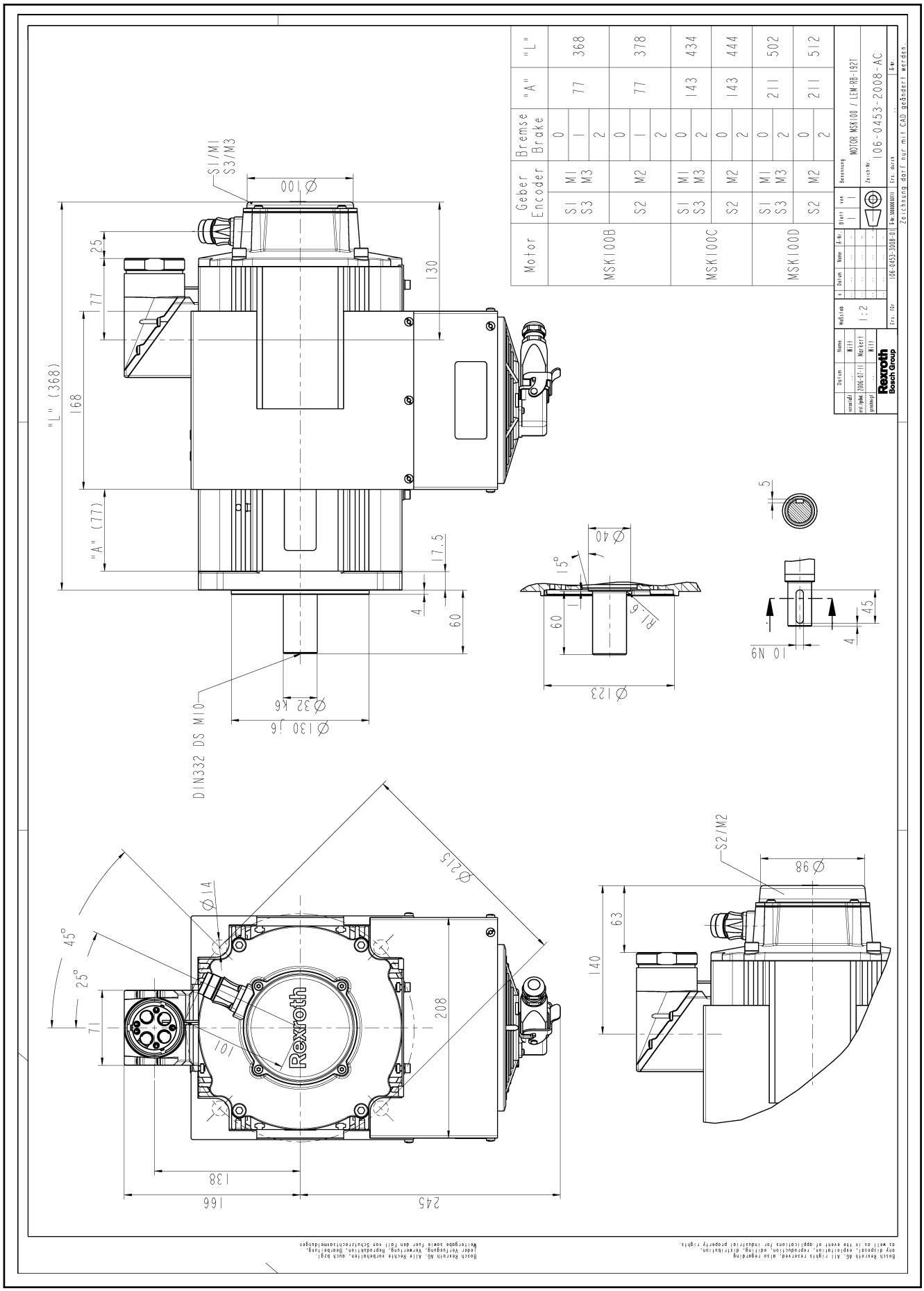

Fig. 5-27: Dimension sheet MSK100 with radial fan unit

5.29 MSK101 Specifications

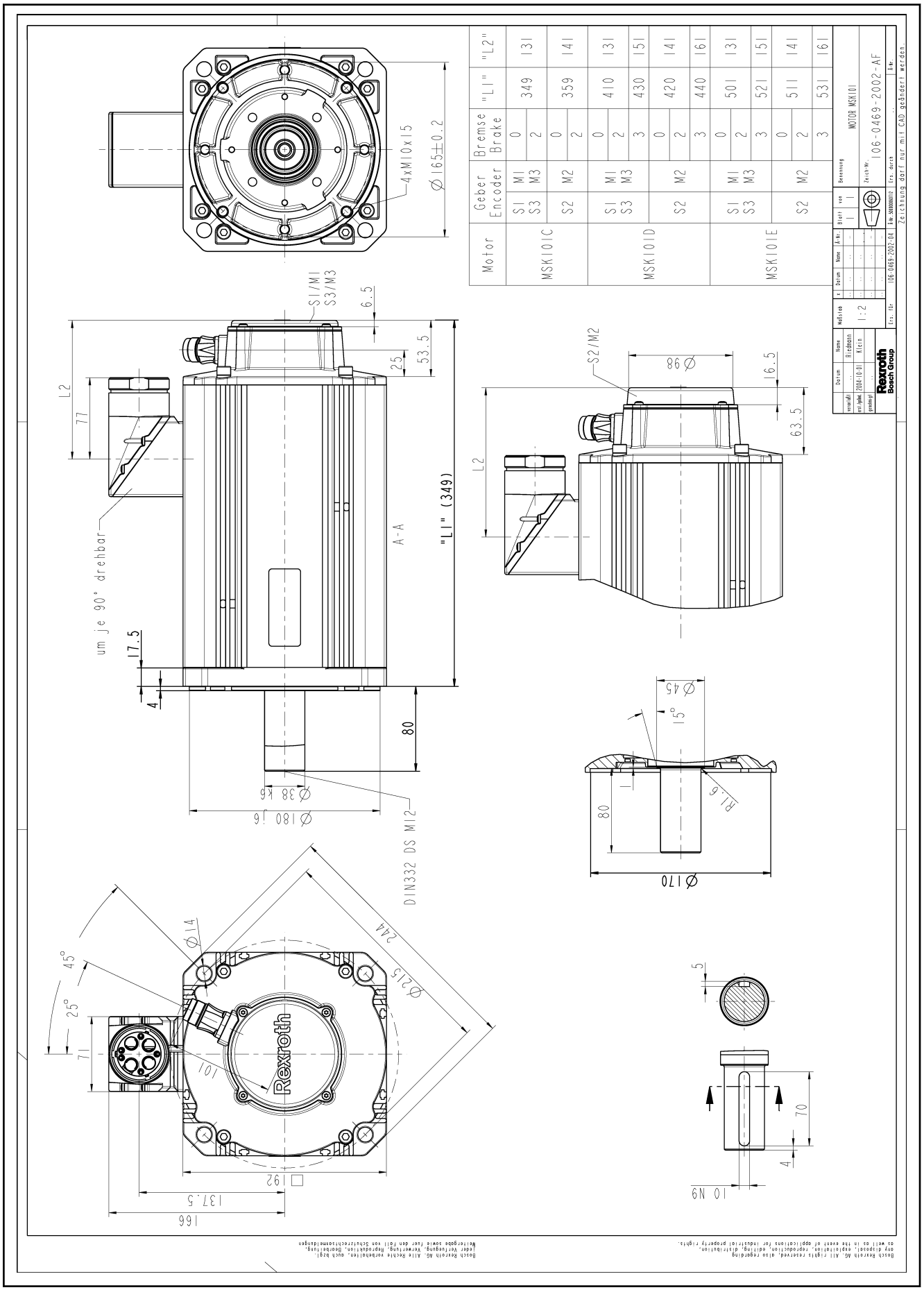

Fig. 5-28: MSK101 specification

Specifications

5.30 MSK101 Specifications Liquid Cooling

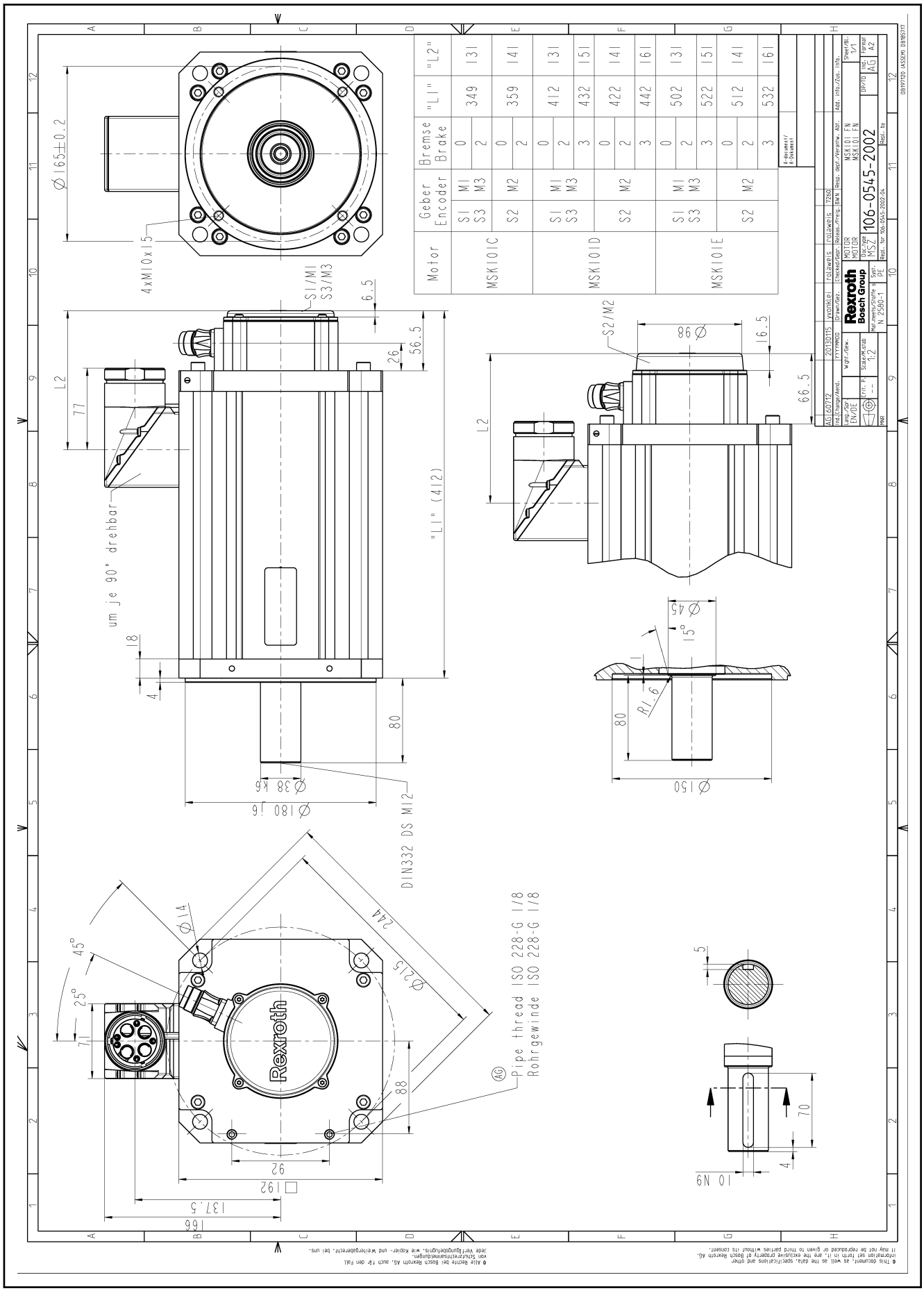

Fig. 5-29: MSK101...FN specification

5.31 MSK101 Specifications Fan Unit Axial

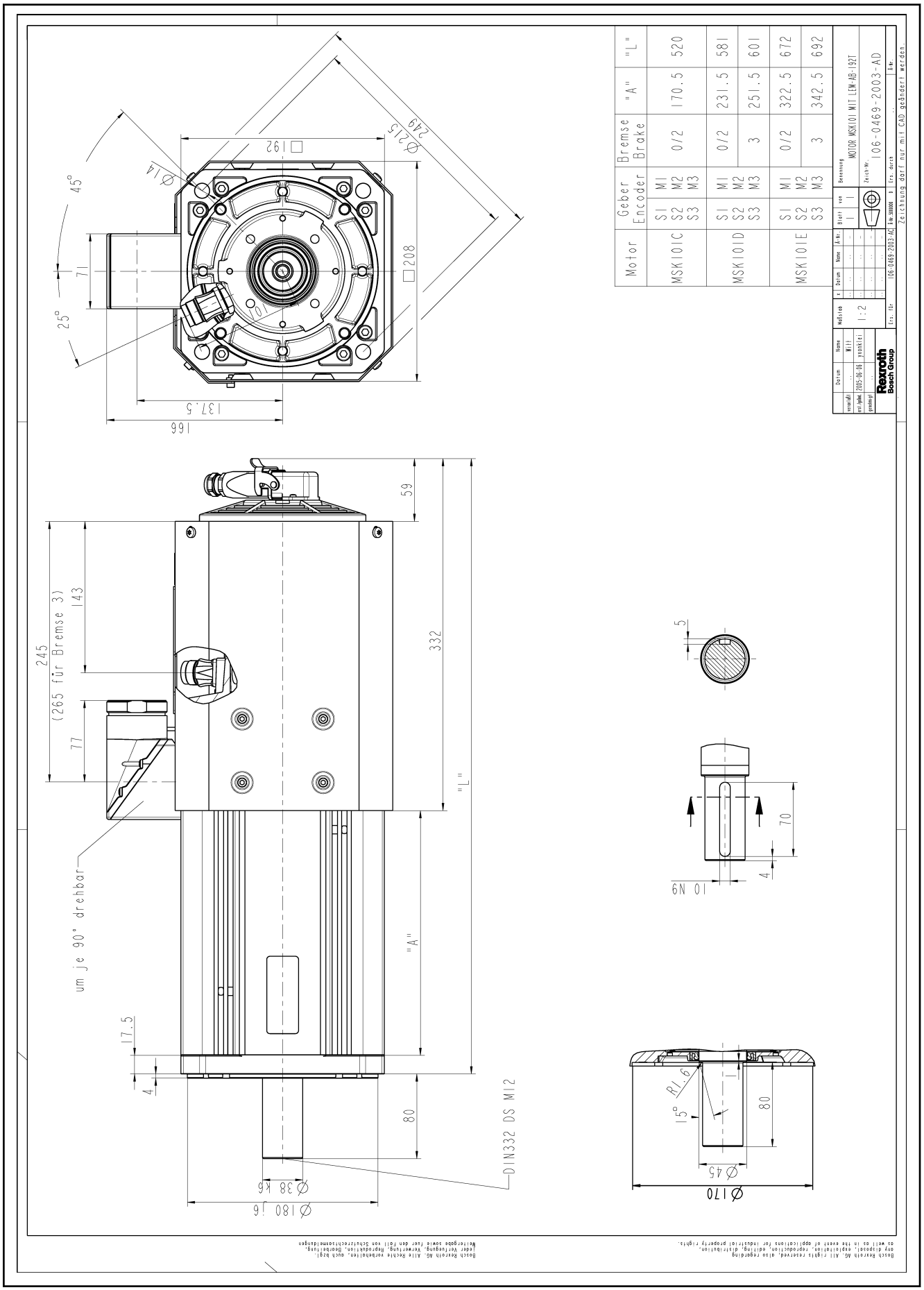

Fig. 5-30: Dimension sheet MSK101 with axial fan unit

Specifications

5.32 MSK101 Specifications Fan Unit Radial

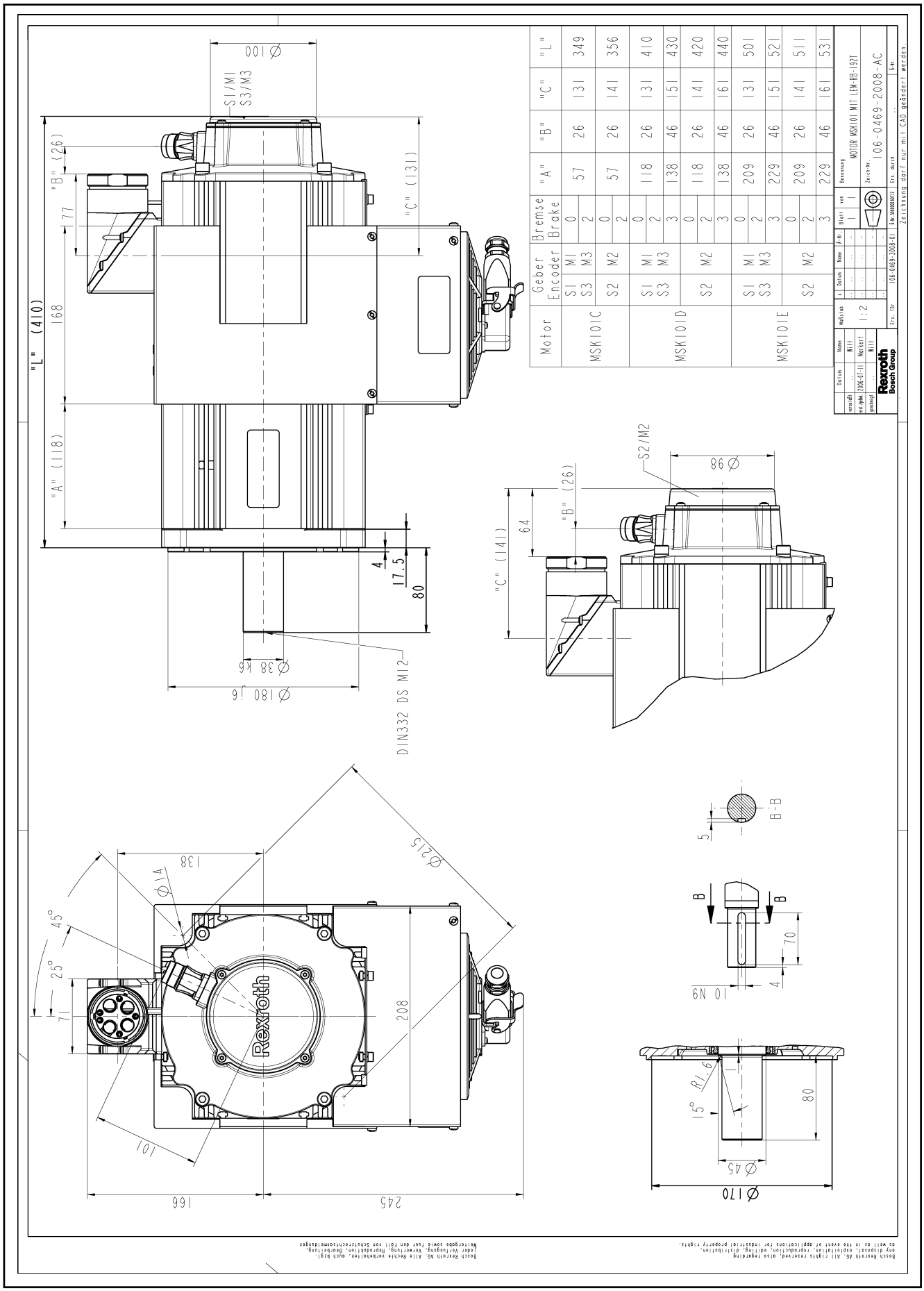

Fig. 5-31: Dimension sheet MSK101 with radial fan unit

5.33 MSK103 Specifications

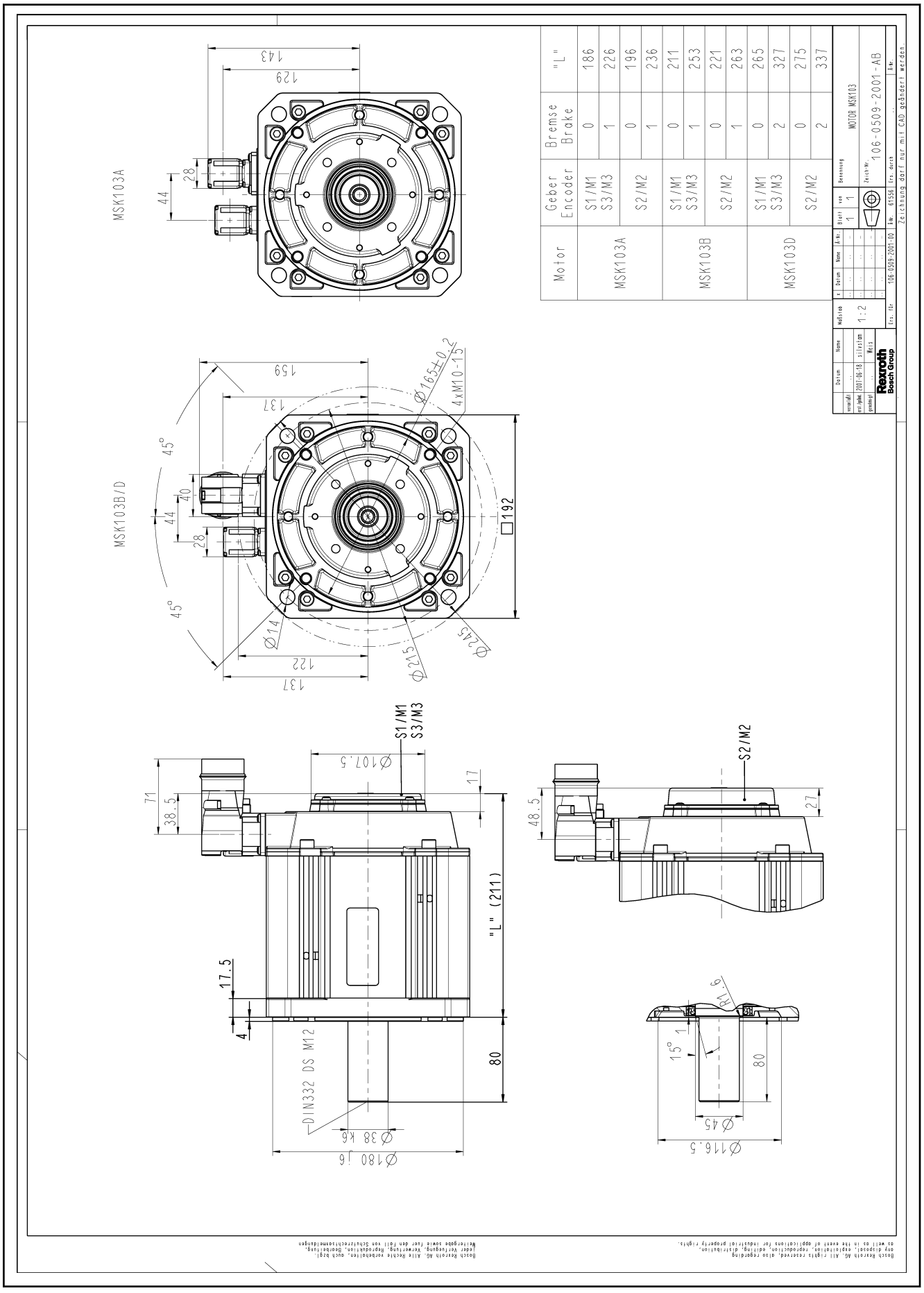

Fig. 5-32: MSK103 specification

Specifications

5.34 MSK131 Specifications

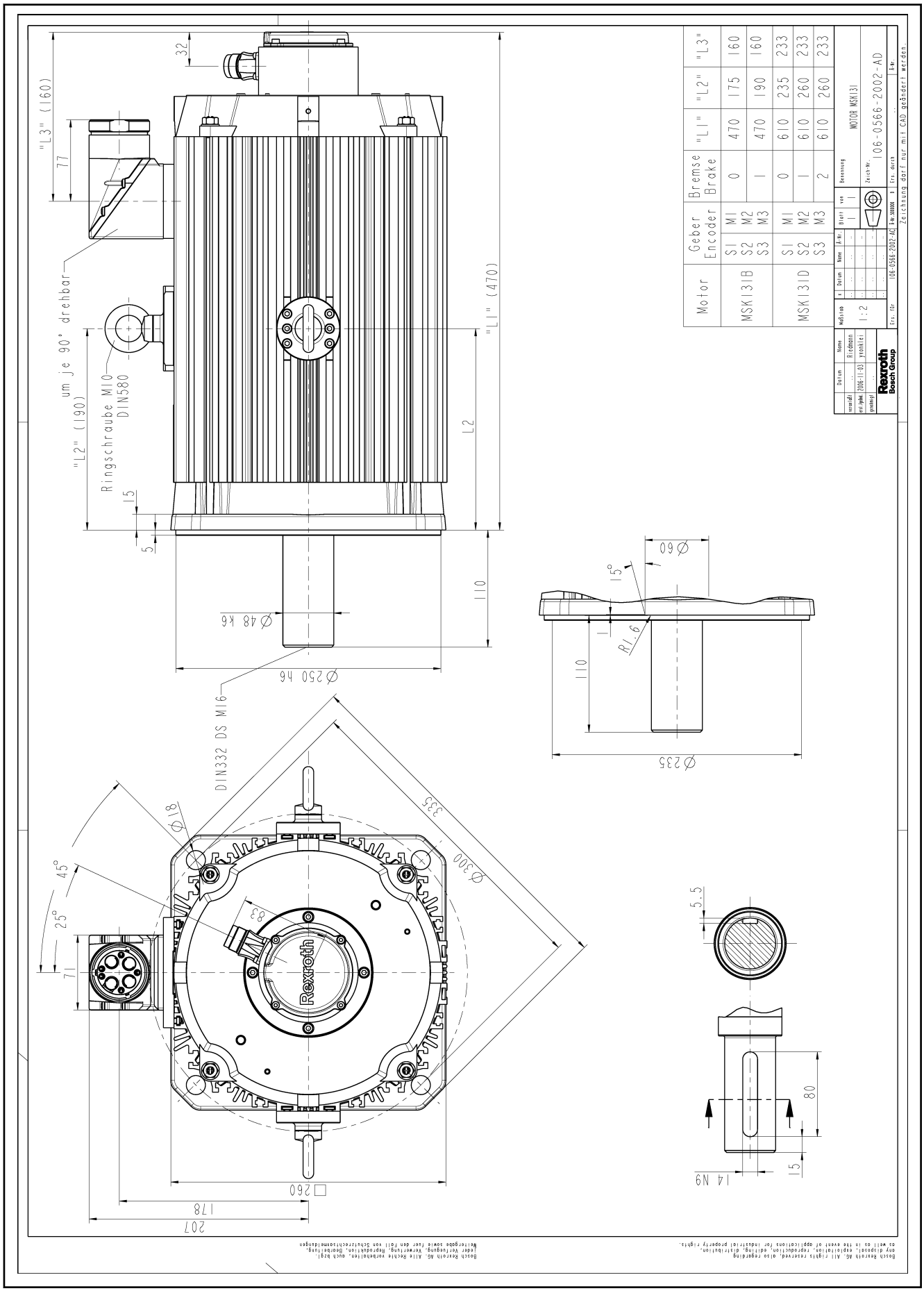

Fig. 5-33: MSK131 specification

5.35 MSK131 Specifications Fan Unit Axial

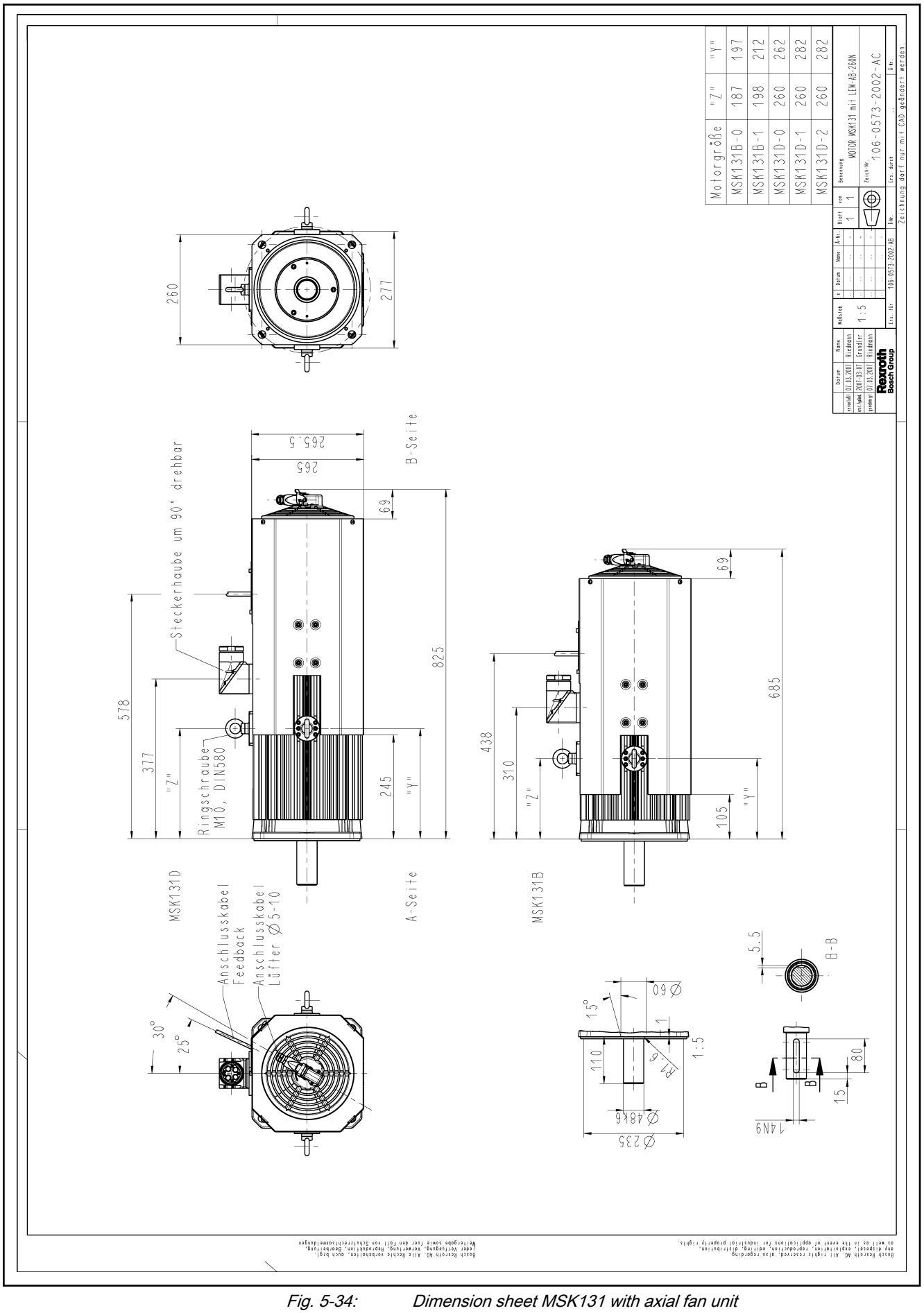

Fig. 5-34: Dimension sheet MSK131 with axial fan unit

Specifications

5.36 MSK133 Specifications

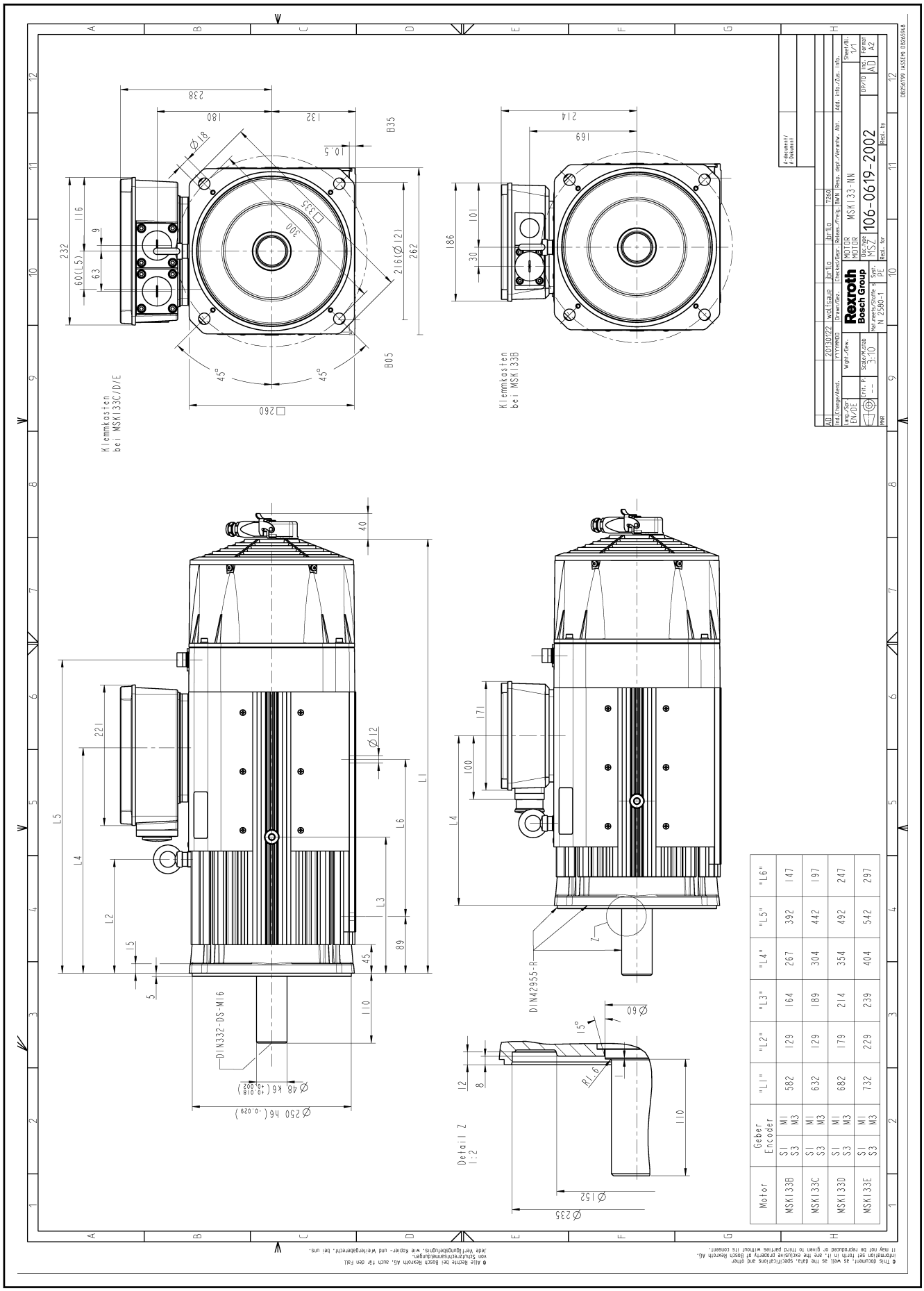

Fig. 5-35: MSK133 specification

5.37 MSK133 Specifications Liquid Cooling

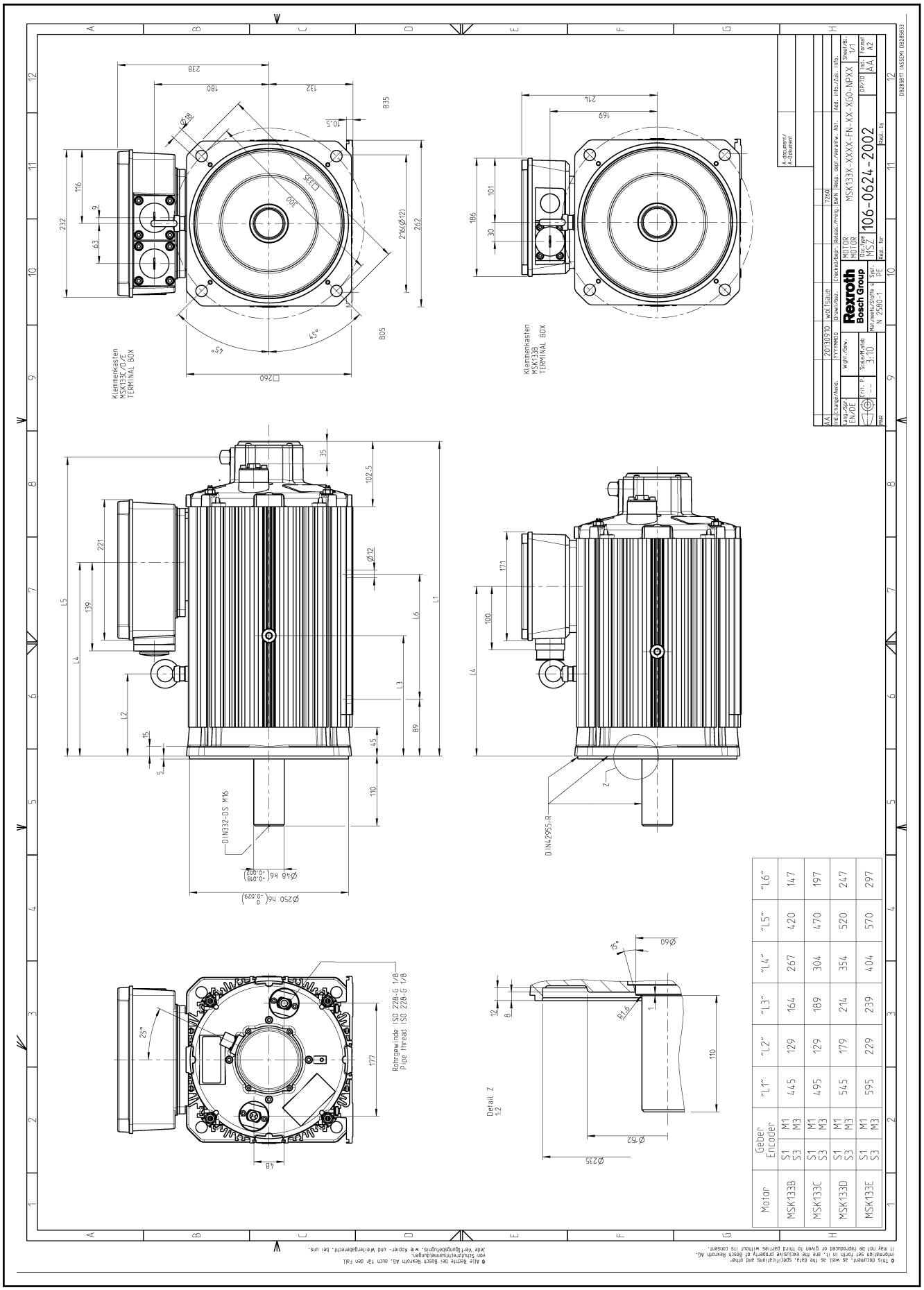

Motor	Geber Encoder	"L1"	"L2"	"L3"	"L4"	"L5"	"L6"
MSK133B	S1 S3	445	129	164	267	420	147
	M1 M3						
MSK133C	S1 S3	495	129	189	304	470	197
	M1 M3						
MSK133D	S1 S3	545	179	214	354	520	247
	M1 M3						
MSK133E	S1 S3	595	229	239	404	570	297
	M1 M3						

Fig. 5-36: MSK133_-____-FN

6 Type Code

6.1 MSK Type Code - Structure and Description

General Information

Each order of a Rexroth product must be based on the type code. All available motor variants are uniquely described by their type code. The individual characters of the type code (abbrev. column) and their meaning are described below.

☞ Before ordering, please check the availability of the separate options with your Bosch Rexroth sales partner.

Product

Example: **MSK**-...

MSK three-digit Rexroth-specific designation of a servomotor series.

Frame size

Example: MSK**050**-...

The motor size determines important mechanical motor specifications and is proportional to the performance variables.

Frame length

Example: MSK050**B**-...

Within a series, the grading of increasing motor length is indicated by ID letters in alphabetic order. Frame lengths are, for example, B, C, D and E.

Winding

Example: MSK050B-**0300**-...

The four-digit string of numerals stands for the rated velocity which is applicable for the respective winding variant.

Cooling type

Example: MSK050B-0300-**NN**-...

Option	Design	Detail
NN	Natural convection	Fan mounting possible [1)]
FN	Liquid cooling	Standard connection for coolant ducts 1/8", fan mounting not possible
SA	Axial fan, blowing	only for MSK133

1) Not admissible for ATEX version

Tab. 6-1: Cooling types for IndraDyn S motors

Encoder

Example: MSK050B-0300-NN-**S1**-...

IndraDyn S motors are equipped with an integrated encoder system. To control the motor speed and / or to position the motor, the drive control device must know the current motor position.

Electrical connection

Example: MSK050B-0300-NN-S1-**U**-...

Option	Description	MSK
U	Rotating power and encoder connector	030, -040, -043, -050, -060, -070, -071,-075, -076, -103
A	Power connector, side A	100, -101, -131
B	Power connector, side B	
L	Power connector, to the left	
R	Power connector, to the right	
F	Terminal box	133
For detailed description of the connector refer to chapter 8 "Connection Technique" on page 197		

Tab. 6-2: IndraDyn S connectors with fixed output direction

Type Code

Shaft

Example: MSK050B-0300-NN-S1-U**G**-...

In order to connect the machine elements to be driven to the motor drive shafts, the following options are available for all IndraDyn S motors:

Option	Design	Detail
G	Plain shaft	With frontal centering hole with "DS" thread according to DIN 332, Part 2, Edition 05.83
P	Shaft with keyway [1)]	
1) Keyway according to DIN 6885, sheet 1, ed. 08.68. For details, refer to the dimension sheets.		

Tab. 6-3: IndraDyn S output shafts

☞ IndraDyn S motors are balanced with a key. The related key is not included in the scope of delivery.

Holding brake

Example: MSK050B-0300-NN-S1-UG**1**-...

As an option, IndraDyn S motors are available with electrically releasing holding brakes with various holding torques.

Option	Holding Brakes
0	Without holding brake
1, 2, 3	With holding brake The holding torques are indicated in the motor type code.

Tab. 6-4: IndraDyn S holding brakes

☞ The holding brake is not suitable for the protection of personnel or as a service brake! Please also observe the installation and safety instructions on the motor holding brakes in the chapter entitled "Application Notes".

Design

Example: MSK050B-0300-NN-S1-UG1-**NNNN**

NNNN = standard design

NSNN = standard and explosion protection design according to equipment group II, categories 3G and 3D according to DIN EN 60079 et seqq.

RNNN = design with increased concentricity

RSNN = design with increased concentricity and explosion protection design according to equipment group II, categories 3G and 3D according to DIN EN 60079 et seqq.

Reference to standards

The item "Reference to Standards" indicates standards referred to in the type code (e.g. DIN, EN, ISO, etc.) or factory standards (RNC ...) that are also applicable. The version listed is always that valid at the time the type code is issued.

Remark

The "Comment" section provides information required for handling the type code. This includes, for example, descriptions on footnotes or notes on availability.

6.2 MSK030 Type Code

Abbreviation column	1	2	3	4	5	6	7	8	9	10	11	12	13	14	15	16	17	18	19	20	21	22	23	24	25	26	27	28	29	30	31	32	33	34	35	36	37	38	39	40
Example:	M	S	K	0	3	0	C	-	0	9	0	0	-	N	N	-	S	1	-	U	G	0	-	N	N	N	N													

Product

MSK = MSK

Size

030 =030

Lengths

Lengths = B, C

Winding

MSK030B = 0900
MSK030C = 0900

Cooling

Natural convection = NN

Encoder [1)]

Optical encoder, Singleturn Hiperface, with 128 signal periods = S1
Capacitive encoder, Singleturn Hiperface, with 16 signal periods = S3
Optical encoder, Multiturn absolute Hiperface, with 128 signal periods = M1
Capacitive encoder, Multiturn absolute Hiperface, with 16 signal periods = M3

Electrical Connection

Connector, rotatable 240° = U

Shaft

Smooth shaft with shaft sealing ring (standard) = G
Shaft with keyway acc. to DIN 6885-1 with shaft sealing ring = P

Holding Brake

Without holding brake = 0
Holding brake, electrically-released, 1 Nm = 1

Other Design

Standard = NNNN
Standard and Ex-design acc. to device group II, categories 3G and 3D acc. to EN 60079 ff = NSNN

Remark

1) Encoder "S3" and "M3" are only available with other design "NNNN"

Fig. 6-1: MSK030 Type Code

Type Code

6.3 MSK040 Type Code

Abbreviation-column	1	2	3	4	5	6	7	8	9	10	11	12	13	14	15	16	17	18	19	20	21	22	23	24	25	26	27	28	29	30	31	32	33	34	35	36	37	38	39	40
Example:	M	S	K	0	4	0	C	-	0	6	0	0	-	N	N	-	S	1	-	U	G	0	-	N	N	N	N														

Product

MSK = MSK

Size

040 =040

Lengths

Lengths = B, C

Winding

MSK040B = 0450, 0600

MSK040C = 0450, 0600

Cooling

Natural convection = NN

Encoder [1)]

Optical encoder, Singleturn Hiperface, with 128 signal periods = S1

Optical encoder, Singleturn EnDat2.1, with 2,048 signal periods = S2

Capacitive encoder, Singleturn Hiperface, with16 signal periods = S3

Optical encoder, Multiturn absolute Hiperface, with 128 signal periods = M1

Optical encoder, Multiturn absolute EnDat2.1, with 2,048 signal periods = M2

Capacitive encoder, Multiturn absolute Hiperface, with 16 signal periods = M3

Electrical Connection

Connector, rotatable 240° = U

Shaft

Smooth shaft with shaft sealing ring (standard) = G

Shaft with keyway acc. to DIN 6885-1 with shaft sealing ring = P

Holding Brake

Without holding brake = 0

Holding brake, electrically-released, 4 Nm = 1

Other Design

Standard = NNNN

Standard and Ex-design acc. to device group II, categories 3G and 3D acc. to EN 60079 ff = NSNN

Remark

1) Encoder "S3" and "M3" are only available with other design "NNNN"

Fig. 6-2: Type code MSK040

6.4 MSK043 Type Code

Abbreviation column	1	2	3	4	5	6	7	8	9	10	11	12	13	14	15	16	17	18	19	20	21	22	23	24	25	26	27	28	29	30	31	32	33	34	35	36	37	38	39	40
Example:	M	S	K	0	4	3	C	-	0	6	0	0	-	N	N	-	S	1	-	U	G	0	-	N	N	N	N														

Product

MSK = MSK

Size

043 =043

Length

Length = C

Winding

MSK043C = 0600

Cooling

Natural convection = NN

Encoder [1)]

Optical encoder, Singleturn Hiperface, with 128 signal periods = S1
Capacitive encoder, Singleturn Hiperface, with 16 signal periods = S3
Optical encoder, Multiturn-absolute Hiperface, with 128 signal periods = M1
Capacitive encoder, Multiturn-absolute Hiperface, with 16 signal periods = M3

Electrical Connection

Connector, rotatable 240° = U

Shaft

Smooth shaft with shaft sealing ring (standard) = G
Shaft with keyway acc. to DIN 6885-1 with shaft sealing ring = P

Holding Brake

Without holding brake = 0
Holding brake, electrically-released, 4 Nm = 1

Other Design

Standard = NNNN

Remark

1) Encoder "S3" and "M3" are only availble with other design "NNNN"

Fig. 6-3: MSK043 Type Code

Type Code

6.5 MSK050 Type Code

Abbreviation column	1	2	3	4	5	6	7	8	9	10	11	12	13	14	15	16	17	18	19	20	21	22	23	24	25	26	27	28	29	30	31	32	33	34	35	36	37	38	39	40
Example:	M	S	K	0	5	0	C	-	0	6	0	0	-	N	N	-	S	1	-	U	G	0	-	N	N	N	N													

Product

MSK = MSK

Size

050 =050

Lengths

Lengths = B, C

Winding

MSK050B = 0300, 0450, 0600

MSK050C = 0300, 0450, 0600

Cooling

Natural convection = NN

Encoder [1)]

Optical encoder, Singleturn Hiperface, with 128 signal periods = S1

Optical encoder, Singleturn EnDat2.1, with 2,048 signal periods = S2

Capacitive encoder, Singleturn Hiperface, with 16 signal periods = S3

Optical encoder, Multiturn-absolute Hiperface, with 128 signal periods = M1

Optical encoder, Multiturn-absolute EnDat2.1, with 2,048 signal periods = M2

Capacitive encoder, Multiturn-absolute Hiperface, with 16 signal periods = M3

Electrical Connection

Connector, rotatable 240° = U

Shaft

Smooth shaft with shaft sealing ring (standard) = G

Shaft with keyway acc. to DIN 6885-1 with shaft sealing ring = P

Holding Brake

Without holding brake = 0

Holding brake, electrically-released, 6 Nm = 1

Other Design

Standard = NNNN

Standard and Ex design acc. to device group II, category 3G and 3D acc. to EN 60079 ff = NSNN

With increased concentricity, run-out acc. to DIN 42955 = RNNN

With increased concentricity, run-out acc. to DIN 42955 and Ex-design acc. to device group II, category 3G and 3D acc. to EN 60079 ff = RSNN

Remark

1) Encoder "S1" and "M1" are only available with other design "NNNN" and "NSNN"
Encoder "S2" and "M2" are only available with other design "RNNN" and "RSNN"
Encoder "S3" and "M3" are only available with other design "NNNN"

Fig. 6-4: MSK050 type code

6.6 MSK060 Type Code

Abbreviation column	1	2	3	4	5	6	7	8	9	10	11	12	13	14	15	16	17	18	19	20	21	22	23	24	25	26	27	28	29	30	31	32	33	34	35	36	37	38	39	40
Example:	M	S	K	0	6	0	C	-	0	6	0	0	-	N	N	-	S	1	-	U	G	0	-	N	N	N	N													

Product

MSK = MSK

Size

060 =060

Lengths

Lengths = B, C

Winding

MSK060B = 0300, 0600
MSK060C = 0300, 0600

Cooling

Natural convection = NN

Encoder [1)]

Optical encoder, Singleturn Hiperface, with 128 signal periods = S1
Optical encoder, Singleturn EnDat2.1, with 2,048 signal periods = S2
Capacitive encoder, Singleturn Hiperface, with 16 signal periods = S3
Optical encoder, Multiturn-absolute Hiperface, with 128 signal periods = M1
Optical encoder, Multiturn-absolute EnDat2.1, with 2,048 signal periods = M2
Capacitive encoder, Multiturn-absolute Hiperface, with 16 signal periods = M3

Electrical Connection

Connector, rotatable 240° = U

Shaft

Smooth shaft with shaft sealing ring (standard) = G
Shaft with keyway acc. to DIN 6885-1 with shaft sealing ring = P

Holding Brake

Without holding brake = 0
Holding brake, electrically-released, 10 Nm = 1

Other Design

Standard = NNNN
Standard and Ex design acc. to device group II, categories 3G and 3D acc. to EN 60079 ff = NSNN
With increased concentricity, run-out acc. to DIN 42955 = RNNN
With increased concentricity, run-out acc. to DIN 42955 and Ex design acc. to device group II, categories 3G and 3D acc. to EN 60079 ff = RSNN

Remark

1) Encoders "S1" and "M1" are only available with other design "NNNN" and "NSNN"
Encoders "S2" and "M2" are only available with other design "RNNN" and "RSNN"
Encoders "S3" and "M3" are only available with other design "NNNN"

Fig. 6-5: MSK060 type code

Type Code

6.7 MSK061 Type Code

Abbreviation column	1	2	3	4	5	6	7	8	9	10	11	12	13	14	15	16	17	18	19	20	21	22	23	24	25	26	27	28	29	30	31	32	33	34	35	36	37	38	39	40
Example:	M	S	K	0	6	1	C	-	0	3	0	0	-	N	N	-	S	1	-	U	G	0	-	N	N	N	N													

Product

MSK = MSK

Size

061 =061

Lengths [1)]

Length = B, C

Winding

MSK061B = 0300

MSK061C = 0200, 0300, 0600

Cooling

Natural convection = NN

Encoder [2)]

Optical encoder, Singleturn Hiperface, with 128 signal periods = S1

Optical encoder, Singleturn EnDat2.1, with 2,048 signal periods = S2

Capacitive encoder, Singleturn Hiperface, with 16 signal periods = S3

Optical encoder, Multiturn-absolute Hiperface, with 128 signal periods = M1

Optical encoder, Multiturn-absolute EnDat2.1, with 2,048 signal periods = M2

Capacitive encoder, Multiturn-absolute Hiperface, with 16 signal periods = M3

Electrical Connection

Connector, rotatable 240° = U

Shaft

Smooth shaft with shaft sealing ring (standard) = G

Shaft with keyway acc. to DIN 6885-1 with shaft sealing ring = P

Holding Brake

Without holding brake = 0

Holding brake, electrically-released, 10 Nm = 1

Other Design

Standard = NNNN

Standard and Ex design acc. to device group II, categories 3G and 3D acc. to EN 60079 ff = NSNN

With increased concentricity, run-out acc. to DIN 42955 = RNNN

With increased concentricity, run-out acc. to DIN 42955 and Ex design acc. to device group II, categories 3G and 3D acc. to EN 60079 ff = RSNN

Remark

1) Frame length "B" is only available with encoder "S1", "S3", "M1" or "M3" and other design "NNNN"

2) Encoder "S1" and "M1" are only available with other design "NNNN" and "NSNN"
Encoder "S2" and "M2" are only available with other design "RNNN" and "RSNN"
Encoder "S3" and "M3" are only available with other design "NNNN"

Fig. 6-6: MSK061 Type Code

6.8 MSK070 Type Code

Abbreviation column	1	2	3	4	5	6	7	8	9	10	11	12	13	14	15	16	17	18	19	20	21	22	23	24	25	26	27	28	29	30	31	32	33	34	35	36	37	38	39	40
Example:	M	S	K	0	7	0	C	-	0	4	5	0	-	N	N	-	S	1	-	U	G	0	-	N	N	N	N													

Product

MSK	= MSK

Size

070	=070

Lengths

Lengths	= C, D, E

Winding

MSK070C	= 0150, 0300, 0450
MSK070D	= 0150, 0300, 0450
MSK070E	= 0150, 0300, 0450

Cooling

Natural convection	= NN

Encoder [1)]

Optical encoder, Singleturn Hiperface, with 128 signal periods	= S1
Optical encoder, Singleturn EnDat2.1, with 2,048 signal periods	= S2
Capacitive encoder, Singleturn Hiperface, with 16 signal periods	= S3
Optical encoder, Multiturn-absolute Hiperface, with 128 signal periods	= M1
Optical encoder, Multiturn-absolute EnDat2.1, with 2,048 signal periods	= M2
Capacitive encoder, Multiturn-absolute Hiperface, with 16 signal periods	= M3

Electrical Connection

Connector, rotatable 240°	= U

Shaft

Smooth shaft with shaft sealing ring (standard)	= G
Shaft with keyway acc. to DIN 6885-1 with shaft sealing ring	= P

Holding Brake

Without holding brake	= 0
Holding brake, electrically-released, 23 Nm	= 1

Other Design

Standard	= NNNN
Standard and Ex design acc. to device group II, categories 3G and 3D acc. to EN 60079 ff	= NSNN
With increased concentricity, run-out according to DIN 42955	= RNNN
With increased concentricity, run-out according to DIN 42955 and Ex design acc. to device group II, categories 3G and 3D acc. to EN 60079 ff	= RSNN

Remark

1) Encoder "S1" and "M1" are only available with other design "NNNN" and "NSNN"
Encoder "S2" and "M2" are only available with other design "RNNN" and "RSNN"
Encoder "S3" and "M3" are only available with other design "NNNN"

Fig. 6-7: MSK070 type code

Type Code

6.9 MSK071 Type Code

Abbreviation column	1	2	3	4	5	6	7	8	9	10	11	12	13	14	15	16	17	18	19	20	21	22	23	24	25	26	27	28	29	30	31	32	33	34	35	36	37	38	39	40
Example:	M	S	K	0	7	1	D	-	0	3	0	0	-	N	N	-	S	1	-	U	G	0	-	N	N	N	N													

Product

MSK	= MSK

Size

071	=071

Lengths

Frame lengths	= C, D, E

Winding

MSK071C	= 0200, 0300, 0450
MSK071D	= 0200, 0300, 0450
MSK071E	= 0200, 0300, 0450

Cooling

Liquid cooling [1]	= FN
Natural convection	= NN

Encoder [2]

Optical encoder, Singleturn Hiperface, with 128 signal periods	= S1
Optical encoder, Singleturn EnDat2.1, with 2,048 signal periods	= S2
Capacitive encoder, Singleturn Hiperface, with 16 signal periods	= S3
Optical encoder, Multiturn-absolute Hiperface, with 128 signal periods	= M1
Optical encoder, Multiturn-absolute EnDat2.1, with 2,048 signal periods	= M2
Capacitive encoder, Multiturn-absolute Hiperface, with 16 signal periods	= M3

Electrical Connection

Connector, rotatable 240°	= U

Shaft

Smooth shaft with shaft sealing ring (standard)	= G
Shaft with keyway acc. to DIN 6885-1 with shaft sealing ring	= P

Holding Brake

Without holding brake	= 0
Holding brake, electrically-released, 23 Nm	= 1
Holding brake, electrically-released, 30 Nm	= 2

Other Design

Standard	= NNNN
Standard and Ex design acc. to device group II, categories 3G and 3D acc. to EN 60079 ff	= NSNN
With increased concentricity, run-out according to DIN 42955	= RNNN
With increased concentricity, run-out acc. to DIN 42955 and Ex design acc. to device group II, categories 3G and 3D acc. to EN 60079 ff	= RSNN

Remark

1) Cooling mode "FN" is only available with holding brakes "0" and "2" and other design "NNNN" and "RNNN"

2) Encoder "S1" and "M1" are only available with other design "NNNN" and "NSNN"
Encoder "S2" and "M2" are only available with other design "RNNN" and "RSNN"
Encoder "S3" and "M3" are only available with other design "NNNN"

Fig. 6-8: Type code MSK071

6.10 MSK075 Type Code

Abbreviation column	1	2	3	4	5	6	7	8	9	10	11	12	13	14	15	16	17	18	19	20	21	22	23	24	25	26	27	28	29	30	31	32	33	34	35	36	37	38	39	40
Example:	M	S	K	0	7	5	E	-	0	2	0	0	-	N	N	-	S	1	-	U	G	0	-	N	N	N	N													

Product

MSK	= MSK

Size

075	=075

Lengths

Lengths	= C, D, E

Winding

MSK075C	= 0200, 0300, 0450
MSK075D	= 0200, 0300, 0450
MSK075E	= 0200, 0300, 0450

Cooling

Liquid cooling [1]	= FN
Natural convection	= NN

Encoder [2]

Optical encoder, Singleturn Hiperface, with 128 signal periods	= S1
Optical encoder, Singleturn EnDat2.1, with 2,048 signal periods	= S2
Capacitive encoder, Singleturn Hiperface, with 16 signal periods	= S3
Optical encoder, Multiturn-absolute Hiperface, with 128 signal periods	= M1
Optical encoder, Multiturn-absolute EnDat2.1, with 2,048 signal periods	= M2
Capacitive encoder, Multiturn-absolute Hiperface, with 16 signal periods	= M3

Elektrical Connection

Connector, rotatable 240°	= U

Shaft

Smooth shaft with shaft sealing ring (standard)	= G
Shaft with keyway acc. to DIN 6885-1 with shaft sealing ring	= P

Holding Brake

Without holding brake	= 0
Holding brake, electrically-released, 23 Nm	= 1
Holding brake, electrically-released, 30 Nm	= 2

Other Design

Standard	= NNNN
With increased concentricity, run-out according to DIN 42955	= RNNN

Remark

1) Cooling mode "FN" is only available with holding brake "0" and "2" and other design "NNNN" and "RNNN"
2) Encoder "S1" and "M1" are only available with other design "NNNN" and "NSNN"
Encoder "S2" and "M2" are only available with other design "RNNN" and "RSNN"
Encoder "S3" and "M3" are only available with other design "NNNN"

Fig. 6-9: MSK075 Type Code

Type Code

6.11 MSK076 Type Code

Abbreviation column	1	2	3	4	5	6	7	8	9	10	11	12	13	14	15	16	17	18	19	20	21	22	23	24	25	26	27	28	29	30	31	32	33	34	35	36	37	38	39	40
Example:	M	S	K	0	7	6	C	-	0	3	0	0	-	N	N	-	S	1	-	U	G	0	-	N	N	N	N													

Product

MSK = MSK

Size

076 =076

Length

Length = C

Winding

MSK076C = 0300, 0450

Cooling

Natural convection = NN

Encoder [1)]

Optical encoder, Singleturn Hiperface, with 128 signal periods = S1
Optical encoder, Singleturn EnDat2.1, with 2,048 signal periods = S2
Capacitive encoder, Singleturn Hiperface, with 16 signal periods = S3
Optical encoder, Multiturn absolute Hiperface, with 128 signal periods = M1
Optical encoder, Multiturn absolute EnDat2.1, with 2,048 signal periods = M2
Capacitive encoder, Multiturn absolute Hiperface, with 16 signal periods = M3

Electrical Connection

Connector, rotatable 240° = U

Shaft

Smooth shaft with shaft sealing ring (standard) = G
Shaft with keyway acc. to DIN 6885-1 with shaft sealing ring = P

Holding Brake

Without holding brake = 0
Holding brake, electrically-released, 11 Nm = 1

Other Design

Standard = NNNN
Standard and Ex-design acc. to device group II, categories 3G and 3D acc. to DIN EN 60079 ff = NSNN
With increased concentricity, run-out acc. to DIN 42955 = RNNN
With increased concentricity, run-out acc. to DIN 42955 and Ex-design acc. to device group II, categories 3G and 3D acc. to DIN EN 60079 ff = NSNN

Remark

1) Encoders "S1" and "M1" are only available with other design "NNNN" and "NSNN"
Encoders "S2" and "M2" are only available with other design "RNNN" and "RSNN"
Encoders "S3" and "M3" are only available with other design "NNNN"

Fig. 6-10: MSK076 Type Code

6.12 MSK100 Type Code

Abbreviation column	1	2	3	4	5	6	7	8	9	10	11	12	13	14	15	16	17	18	19	20	21	22	23	24	25	26	27	28	29	30	31	32	33	34	35	36	37	38	39	40
Example:	M	S	K	1	0	0	B	-	0	2	0	0	-	N	N	-	S	1	-	A	G	0	-	N	N	N	N													

Product

MSK = MSK

Size

100 =100

Lengths [1)]

Frame lengths = A, B, C, D

Windings [2)]

MSK100A = 0200, 0300, 0450
MSK100B = 0200, 0300, 0400, 0450
MSK100C = 0200, 0300, 0301, 0450 [1)]
MSK100D = 0200, 0300, 0350

Cooling

Natural convection = NN

Encoder [3)]

Optical encoder, Singleturn Hiperface, with 128 signal periods = S1
Optical encoder, Singleturn EnDat2.1, with 2,048 signal periods = S2
Capacitive encoder, Singleturn Hiperface, with 16 signal periods = S3
Optical encoder, Multiturn absolute Hiperface, with 128 signal periods = M1
Optical encoder, Multiturn absolute EnDat2.1, with 2,048 signal periods = M2
Capacitive encoder, Multiturn absolute Hiperface, with 16 signal periods = M3

Electrical Connection [4)]

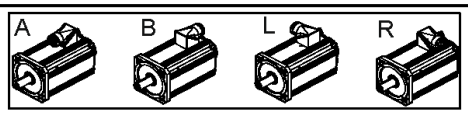

Connector, A-side = A
Connector, B-side = B
Connector, left = L
Connector, right = R

Shaft

Smooth shaft with shaft sealing ring (standard) = G
Shaft with keywas acc. to DIN 6885-1 with shaft sealing ring = P

Holding Brake [5)]

Without holding brake = 0
Holding brake, electrically-released, 32 Nm = 1
Holding brake, electrically-released, 70 Nm = 2

Other Design [6)]

Standard = NNNN
Standard and Ex-design acc. to device group II, categories 3G and 3D acc. to DIN EN 60079 ff = NSNN
With increased concentricity, run-out acc. to DIN 42955 = RNNN
With increased concentricity, run-out acc. to DIN 42955 and Ex-design acc. to device group II, categories 3G and 3D acc. to DIN EN 60079 ff = NSNN

Fig. 6-11: MSK100 type code (page 1)

Type Code

Abbreviation column	1	2	3	4	5	6	7	8	9	10	11	12	13	14	15	16	17	18	19	20	21	22	23	24	25	26	27	28	29	30	31	32	33	34	35	36	37	38	39	40
Example:	M	S	K	1	0	0	B	-	0	2	0	0	-	N	N	-	S	1	-	A	G	0	-	N	N	N	N														

Remark

1) Length "C" and winding "0300" are only available with other design "NNNN" and "RNNN"
2) Winding "0450" is only available with other design "NNNN" and "RNNN"
   Winding "0301" is only available with other design "NSNN" and "RSNN"
3) Encoder "S1" and "M1" are only available with other design "NNNN" and "NSNN"
   Encoder "S2" and "M2" are only available with other design "RNNN" and "RSNN"
   Encoder "S3" and "M3" are only available with other design "NNNN"
4) View from front onto output shaft
5) Holding brake "1" is only available with lengths "A" and "B"
   Holding brake "2" is not available with length "A"

Fig. 6-12: MSK100 type code (page 2)

6.13 MSK101 Type Code

Abbreviation column	1	2	3	4	5	6	7	8	9	10	11	12	13	14	15	16	17	18	19	20	21	22	23	24	25	26	27	28	29	30	31	32	33	34	35	36	37	38	39	40
Example:	M	S	K	1	0	1	D	-	0	2	0	0	-	N	N	-	S	1	-	A	G	0	-	N	N	N	N													

Product

MSK	= MSK

Size

101	=101

Lengths [1)]

Lengths	= C, D, E

Winding [2)]

MSK101C	= 0200, 0300, 0301, 0450
MSK101D	= 0200, 0300, 0301, 0450
MSK101E	= 0200, 0300, 0450

Cooling

Natural convection	= NN
Liquid cooling	= FN

Encoder [3)]

Optical encoder, Singleturn Hiperface, with 128 signal periods	= S1
Optical encoder, Singleturn EnDat2.1, with 2,048 signal periods	= S2
Capacitive encoder, Singleturn Hiperface, with 16 signal periods	= S3
Optical encoder, Multiturn absolute Hiperface, with 128 signal periods	= M1
Optical encoder, Multiturn absolute EnDat2.1, with 2,048 signal periods	= M2
Capacitive encoder, Multiturn absolute Hiperface, with 16 signal periods	= M3

Electrical Connection [4)]

Connector, A-side	= A
Connector, B-side	= B
Connector, left	= L
Connector, right	= R

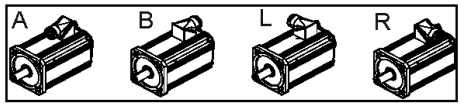

Shaft

Smooth shaft with shaft sealing ring (standard)	= G
Smooth with keyway acc. to DIN 6885-1 with shaft sealing ring	= P

Holding Brake [5)]

Without holding brake	= 0
Holding brake, electrically-released, 70 Nm	= 2
Holding brake, electrically-released, 120 Nm	= 3

Other Design [6)]

Standard	= NNNN
Standard and Ex-design acc. to device group II, categories 3G and 3D acc. to DIN EN 60079 ff	= NSNN
With increased concentricity, run-out acc. to DIN 42955	= RNNN
With increased concentricity, run-out acc. to DIN 42955 and Ex-design acc. to device group II, categories 3G and 3D acc. to DIN EN 60079 ff	= NSNN

Fig. 6-13: MSK101 type code (page 1)

Type Code

Abbreviation column	1	2	3	4	5	6	7	8	9	10	11	12	13	14	15	16	17	18	19	20	21	22	23	24	25	26	27	28	29	30	31	32	33	34	35	36	37	38	39	40
Example:	M	S	K	1	0	1	D	-	0	2	0	0	-	N	N	-	S	1	-	A	G	0	-	N	N	N	N														

Remark

1) Frame length "E" is only available with other design "NNNN" and "RNNN"
2) Windings "0300" and "0450" is only available with other design "NNNN" and "RNNN"
3) Encoders "S1" and "M1" are only available with other design "NNNN" and "NSNN"
   Encoders "S2" and "M2" are only available with other design "RNNN" and "RSNN"
   Encoders "S3" and "M3" are only available with other design "NNNN"
4) View from the front onto the ouptut shaft
5) Holding brake "3" is not available with frame length "C"
6) Other designs "NSNN" and "RSNN" are not available with cooling mode "FN" and holding brake "3"

Fig. 6-14: MSK101 type code (page 2)

6.14 MSK103 Type Code

Abbreviation column	1	2	3	4	5	6	7	8	9	10	11	12	13	14	15	16	17	18	19	20	21	22	23	24	25	26	27	28	29	30	31	32	33	34	35	36	37	38	39	40
Example:	M	S	K	1	0	3	B	-	0	3	0	0	-	N	N	-	S	1	-	U	G	0	-	N	N	N	N														

Product

MSK	= MSK

Size

103	=103

Lengths

Lengths	= A, B, D

Winding [1)]

MSK103A	= 0300
MSK103B	= 0300
MSK103D	= 0300

Cooling

Natural convection	= NN

Encoder

Optical encoder, Singleturn Hiperface, with 128 signal periods	= S1
Optical encoder, Singleturn EnDat2.1, with 2,048 signal periods	= S2
Capacitive encoder, Singleturn Hiperface, with 16 signal periods	= S3
Optical encoder, Multiturn absolute Hiperface, with 128 signal periods	= M1
Optical encoder, Multiturn absolute EnDat2.1, with 2,048 signal periods	= M2
Capacitive encoder, Multiturn absolute Hiperface, with 16 signal periods	= M3

Electrical Connection

Connector, rotatable 240°	= U

Shaft

Smooth shaft with shaft sealing ring (standard)	= G

Holding Brake

Without holding brake	= 0
Holding brake, electrically-released, 33 Nm	= 1
Holding brake, electrically-released, 60 Nm	= 2

Other Design

Standard	= NNNN
With increased concentricity, run-out acc. to DIN 42955	= RNNN

Remark

1) Length "A" is only available with other design "NNNN"
2) Encoders "S1", "S3", "M1" and "M3" are only available with other design "NNNN"
   Encoder "S2" and "M2" are only available with other design "RNNN"
3) Holding brake "1" is only available with lengths "A" and "B"
   Holding brake "2" is only available with length "D"

Fig. 6-15: MSK103 Type Code

Type Code

6.15 MSK131 Type Code

| Abbreviation | | |

6.16 MSK133 Type Code

Abbreviation column	1	2	3	4	5	6	7	8	9	10	11	12	13	14	15	16	17	18	19	20	21	22	23	24	25	26	27	28	29	30	31	32	33	34	35	36	37	38	39	40
Example:	M	S	K	1	3	3	D	-	0	2	0	2	-	S	A	-	S	3	-	E	G	0	-	N	P	3	5													

Product

MSK	= MSK

Size

133	=133

Lengths

Lengths	= B, C, D, E

Winding [1)]

MSK133B	= 0202, 0203
MSK133C	= 0202, 0203
MSK133D	= 0202, 0203
MSK133E	= 0202, 0203

Cooling

Axial fan, blowing	= SA
Liquid cooling	= FN

Encoder

Optical encoder, Singleturn Hiperface, with 128 signal periods	= S1
Capacitive encoder, Singleturn Hiperface, with 16 signal periods	= S3
Optical encoder, Multiturn-absolute Hiperface, with 128 signal periods	= M1
Capacitive encoder, Multiturn-absolute Hiperface, with 16 signal periods	= M3

Electrical Connection

Terminal box, rotatable, A-side	= E

Shaft

Smooth shaft with shaft sealing ring (standard)	= G

Holding Brake

Without holding brake	= 0

Other Design

Flange or foot assembly (B35)	= NP35
Flange assembly (B5)	= NPNN

Remark

1) Winding „0202“ is only available with cooling „SA“
Winding „0203“ is only available with cooling „FN“

Fig. 6-17: MSK133 Type Code

7 Accessories

7.1 Fan Units for MSK Motors

7.1.1 Fields of Application Fan Units

MSK motors from size 060 can be equipped with fan units. The fan units LEM can be ordered as accessories. For certain motors, the fan units can be supplied ex works in mounted condition. Fan units are intended for mounting on motors used in high repetition rates or continuous operation.

NOTICE **Damage to property due to improper application of motors with fan units**

Motors with mounted fan units are not suited for applications with continuous shock load, e.g. pressing, squeezing, chargers, ...

In such a case, use motors with bigger performance without fan units .

The following frame sizes are available.

Axial
For applications that make a slight frame size necessary.

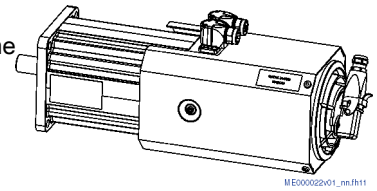

Radial
For applications that make a short frame size necessary.

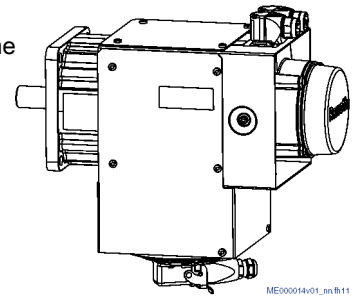

Accessories

7.1.2 Type Code for Fan Units

Abbreviation column	1	2	3	4	5	6	7	8	9	10	11	12	13	14	15	16	17	18	19	20	21	22	23	24	25	26	27	28	29	30	31	32	33	34	35	36	37	38	39	40
Example:	L	E	M	-	A	B	-	1	9	2	T	-	2	1	-	N	N	N	N																						

Type

LEM	= LEM

Ventilation Mode

Axial	= A
Radial	= R

Ventilation Direction

blowing	= B

Flange Dimension [1)]

116 mm	= 116
140 mm	= 140
192 mm	= 192
260 mm	= 260

Design

Standard	= N
Thermal protection	= T

Connection Voltage

1 x AC 115 V, 60 Hz	= 1
1 x AC 230 V, 50/60 Hz	= 2
3 x AC 400 ... 480 V, 50/60 Hz	= 3

Electrical Connection

1 x AC	= 1
3 x AC	= 2

Other Design

None	= NNNN

Remark

1) Flange dimensions "116", "140" and "192" is only available with design "T", connection voltages "1" and "2" and electrical connection "1"
Flange dimensions "260" is only available with ventilation mode "A", design "N", connection voltage "3" and electrical connection "2".

Fig. 7-1: Type code of fan units LEM for MSK motors

7.1.3 Technical Data of Fan Units

Designation	Symbol	Unit	LEM-AB-116T-11-NNNN	LEM-AB-116T-21-NNNN	LEM-RB-116T-11-NNNN	LEM-RB-116T-21-NNNN
Voltage type		-	1~ AC			
Nominal frequency	f_1	Hz	60	50	60	50
Nominal voltage	U_{1_f1}	V	115	230	115	230
Fan flow	I_{1_f1}	A	0.42	0.19	0.42	0.19
Power consumption	S_{1_f1}	VA	48.00	44.00	48.00	44.00
Nominal frequency	f_2	Hz	-	60	-	60
Nominal voltage	U_{1_f2}	V	-	230	-	230
Fan flow	I_{1_f2}	A	-	0.17	-	0.17
Power consumption	S_{1_f2}	VA	-	39.00	-	39.00
Protection class acc. to EN 60034-5	-	-	IP65			
Thermal class acc. to EN 60034-1	T.CL.	-	105			
Thermal protection[1)]	-	-	TPF			
Air flow direction		-	blowing			
Mass	m	kg	2.6		3.2	
						Latest amendment: 2014-04-30

1) Thermo Protected Fan (UL: self protected); no circuit with external motor protection necessary

Tab. 7-1: Data sheet fan frame size 116

Designation	Symbol	Unit	LEM-AB-140T-11-NNNN	LEM-AB-140T-21-NNNN	LEM-RB-140T-11-NNNN	LEM-RB-140T-21-NNNN
Voltage type		-	1~ AC			
Nominal frequency	f_1	Hz	60	50	60	50
Nominal voltage	U_{1_f1}	V	115	230	115	230
Fan flow	I_{1_f1}	A	0.44	0.20	0.44	0.20
Power consumption	S_{1_f1}	VA	51.00	46.00	51.00	46.00
Nominal frequency	f_2	Hz	-	60	-	60
Nominal voltage	U_{1_f2}	V	-	230	-	230
Fan flow	I_{1_f2}	A	-	0.18	-	0.18
Power consumption	S_{1_f2}	VA	-	41.00	-	41.00
Protection class acc. to EN 60034-5	-	-	IP65			
Thermal class acc. to EN 60034-1	T.CL.	-	105			
Thermal protection[1)]	-	-	TPF			
Air flow direction		-	blowing			
Mass	m	kg	3.2		4.0	
						Latest amendment: 2014-04-30

1) Thermo Protected Fan (UL: self protected); no circuit with external motor protection necessary

Tab. 7-2: Data sheet fan frame size 140

Accessories

Designation	Symbol	Unit	LEM-AB-192T-11-NNNN	LEM-AB-192T-21-NNNN	LEM-RB-192T-11-NNNN	LEM-RB-192T-21-NNNN
Voltage type		-	1~ AC			
Nominal frequency	f_1	Hz	60	50	60	50
Nominal voltage	U_{1_f1}	V	115	230	115	230
Fan flow	I_{1_f1}	A	0.48	0.21	0.48	0.21
Power consumption	S_{1_f1}	VA	55.00	48.00	55.00	48.00
Nominal frequency	f_2	Hz	-	60	-	60
Nominal voltage	U_{1_f2}	V	-	230	-	230
Fan flow	I_{1_f2}	A	-	0.20	-	0.20
Power consumption	S_{1_f2}	VA	-	46.00	-	46.00
Protection class acc. to EN 60034-5	-	-	IP65			
Thermal class acc. to EN 60034-1	T.CL.	-	105			
Thermal protection[1)]	-	-	TPF			
Air flow direction		-	blowing			
Mass	m	kg	4.3		3.8	
						Latest amendment: 2014-04-30

1) Thermo Protected Fan (UL: self protected); no circuit with external motor protection necessary

Tab. 7-3: Data sheet fan frame size 192

Designation	Symbol	Unit	LEM-AB-260N-32-NNNN
Voltage type		-	3~ AC
Nominal frequency	f_1	Hz	50
Nominal voltage	U_{1_f1}	V	400
Fan flow	I_{1_f1}	A	0.13
Power consumption	S_{1_f1}	VA	90.00
Nominal frequency	f_2	Hz	60
Nominal voltage	U_{1_f2}	V	480
Fan flow	I_{1_f2}	A	0.13
Power consumption	S_{1_f2}	VA	110.00
Protection class acc. to EN 60034-5	-	-	IP65
Thermal class acc. to EN 60034-1	T.CL.	-	105
Thermal protection[1)]	-	-	*
Air flow direction		-	blowing
Mass	m	kg	8.0
			Latest amendment: 2014-04-17

1) Thermo Protected Fan (UL: self protected); no circuit with external motor protection necessary

Tab. 7-4: Data sheet fan frame size 260

7.1.4 Selection Table for Fan Units

Select the fan unit for the motor type required from the following table

Motor	LEM-AB-116T-..-NNNN	LEM-RB-116T-..-NNNN	LEM-AB-140T-..-NNNN	LEM-RB-140T-..-NNNN	LEM-AB-192T-..-NNNN	LEM-RB-192T-..-NNNN	LEM-AB-260N-..-NNNN
MSK060B-....-NN-..-..0-....	-	-	-	-	-	-	-
MSK060B-....-NN-..-.0.1-....	-	-	-	-	-	-	-
MSK060C-....-NN-..-..0-....	■	□	-	-	-	-	-
MSK060C-....-NN-..-.0.1-....	■	■	-	-	-	-	-
MSK061B-....-NN-..-..0-....	-	-	-	-	-	-	-
MSK061B-....-NN-..-.0.1-....	-	-	-	-	-	-	-
MSK061C-....-NN-..-..0-....	■	■	-	-	-	-	-
MSK061C-....-NN-..-.0.1-....	■	■	-	-	-	-	-
MSK070C-....-NN-..-..0-....	-	-	■	-	-	-	-
MSK070C-....-NN-..-.0.1-....	-	-	■	-	-	-	-
MSK070D-....-NN-..-..0-....	-	-	■	□	-	-	-
MSK070D-....-NN-..-.0.1-....	-	-	■	□	-	-	-
MSK070E-....-NN-..-..0-....	-	-	■	■	-	-	-
MSK070E-....-NN-..-.0.1-....	-	-	■	■	-	-	-
MSK071C-....-NN-..-..0-....	-	-	■	■	-	-	-
MSK071C-....-NN-..-.0.1-....	-	-	■	■	-	-	-
MSK071C-....-NN-..-.0.2-....	-	-	■	■	-	-	-
MSK071D-....-NN-..-..0-....	-	-	■	■	-	-	-
MSK071D-....-NN-..-.0.1-....	-	-	■	■	-	-	-
MSK071D-....-NN-..-.0.2-....	-	-	■	■	-	-	-
MSK071E-....-NN-..-..0-....	-	-	■	■	-	-	-
MSK071E-....-NN-..-.0.1-....	-	-	■	■	-	-	-
MSK071E-....-NN-..-.0.2-....	-	-	■	■	-	-	-
MSK075C-....-NN-..-..0-....	-	-	■	■	-	-	-
MSK075C-....-NN-..-.0.1-....	-	-	■	■	-	-	-
MSK075C-....-NN-..-.0.2-....	-	-	■	■	-	-	-
MSK075D-....-NN-..-..0-....	-	-	■	■	-	-	-
MSK075D-....-NN-..-.0.1-....	-	-	■	■	-	-	-
MSK075E-....-NN-..-..0-....	-	-	■	■	-	-	-
MSK075E-....-NN-..-.0.1-....	-	-	■	■	-	-	-
MSK075E-....-NN-..-.0.2-....	-	-	■	■	-	-	-
MSK075E-....-NN-..-.0.3-....	-	-	■	■	-	-	-
MSK076C-....-NN-..-..0-....	-	-	■	□	-	-	-
MSK076C-....-NN-..-.0.1-....	-	-	■	□	-	-	-
MSK100A-....-NN-..-..0-....	-	-	-	-	■	-	-
MSK100A-....-NN-..-.0.1-....	-	-	-	-	■	-	-
MSK100B-....-NN-..-..0-....	-	-	-	-	■	■	-
MSK100B-....-NN-..-.0.1-....	-	-	-	-	■	■	-
MSK100B-....-NN-..-.0.2-....	-	-	-	-	■	■	-

Accessories

Motor	LEM-AB-116T-..-NNNN	LEM-RB-116T-..-NNNN	LEM-AB-140T-..-NNNN	LEM-RB-140T-..-NNNN	LEM-AB-192T-..-NNNN	LEM-RB-192T-..-NNNN	LEM-AB-260N-..-NNNN
MSK100C-....-NN-..-..0-....	-	-	-	-	■	■	-
MSK100C-....-NN-..-.0.1-....	-	-	-	-	■	■	-
MSK100C-....-NN-..-.0.2-....	-	-	-	-	■	■	-
MSK100D-....-NN-..-..0-....	-	-	-	-	■	■	-
MSK100D-....-NN-..-.0.1-....	-	-	-	-	■	■	-
MSK100D-....-NN-..-.0.2-....	-	-	-	-	■	■	-
MSK101C-....-NN-..-..0-....	-	-	-	-	■	□	-
MSK101C-....-NN-..-.0.2-....	-	-	-	-	■	□	-
MSK101D-....-NN-..-..0-....	-	-	-	-	■	■	-
MSK101D-....-NN-..-.0.1-....	-	-	-	-	■	■	-
MSK101D-....-NN-..-...2-....	-	-	-	-	■	■	-
MSK101D-....-NN-..-.0.3-....	-	-	-	-	■	■	-
MSK101E-....-NN-..-..0-....	-	-	-	-	■	■	-
MSK101E-....-NN-..-.0.1-....	-	-	-	-	■	■	-
MSK101E-....-NN-..-.0.2-....	-	-	-	-	■	■	-
MSK101E-....-NN-..-.0.3-....	-	-	-	-	■	■	-
MSK103A-....-NN-..-..0-....	-	-	-	-	-	-	-
MSK103A-....-NN-..-.0.1-....	-	-	-	-	-	-	-
MSK103B-....-NN-..-..0-....	-	-	-	-	-	-	-
MSK103B-....-NN-..-.0.1-....	-	-	-	-	-	-	-
MSK103D-....-NN-..-..0-....	-	-	-	-	-	-	-
MSK103D-....-NN-..-.0.2-....	-	-	-	-	-	-	-
MSK131B-....-NN-..-..0-....	-	-	-	-	-	-	■
MSK131B-....-NN-..-.0.1-....	-	-	-	-	-	-	■
MSK131D-....-NN-..-..0-....	-	-	-	-	-	-	■
MSK131D-....-NN-..-.0.1-....	-	-	-	-	-	-	■
MSK131D-....-NN-..-.0.2-....	-	-	-	-	-	-	■

- not deliverable, assembly not possible
- ■ ex works mounted deliverable
- □ deliverable as adapter kit.

Tab. 7-5: Selection table motor-fan unit

Please observe the assembly order for fan units delivered as "adapter kit □".

1. Flange on the motor without fan unit onto the machine
2. Mount the fan unit

7.1.5 Fan Units Electrical Connection

Connection 1-phase

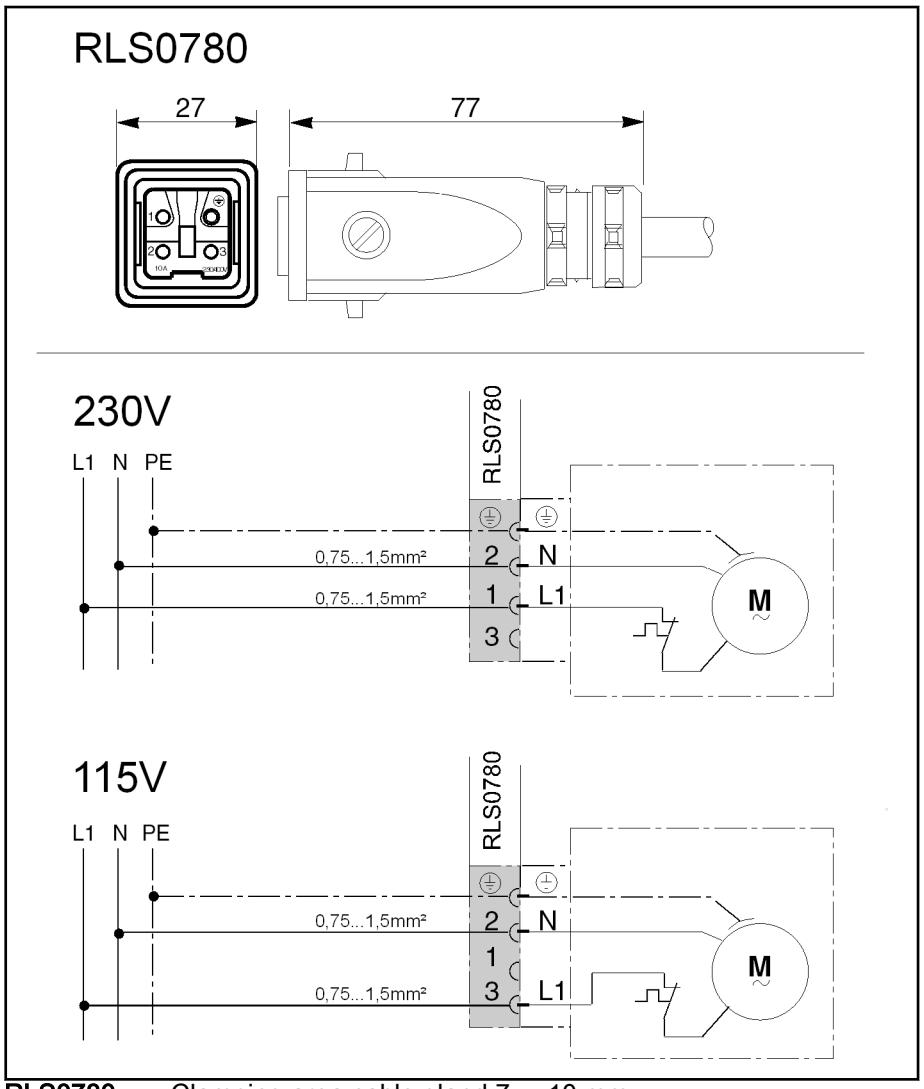

RLS0780 Clamping area cable gland 7 ... 10 mm

Fig. 7-2: Fan connection 1-phase with protection switch

LEM fan units in design "T" with integrated thermo protection do not need any circuit with external motor protection switch.

☞ Protection from false connection!

- 230V: L1 auf Pin 1
- 115V: L1 auf Pin 3

Accessories

Connection 3-phase

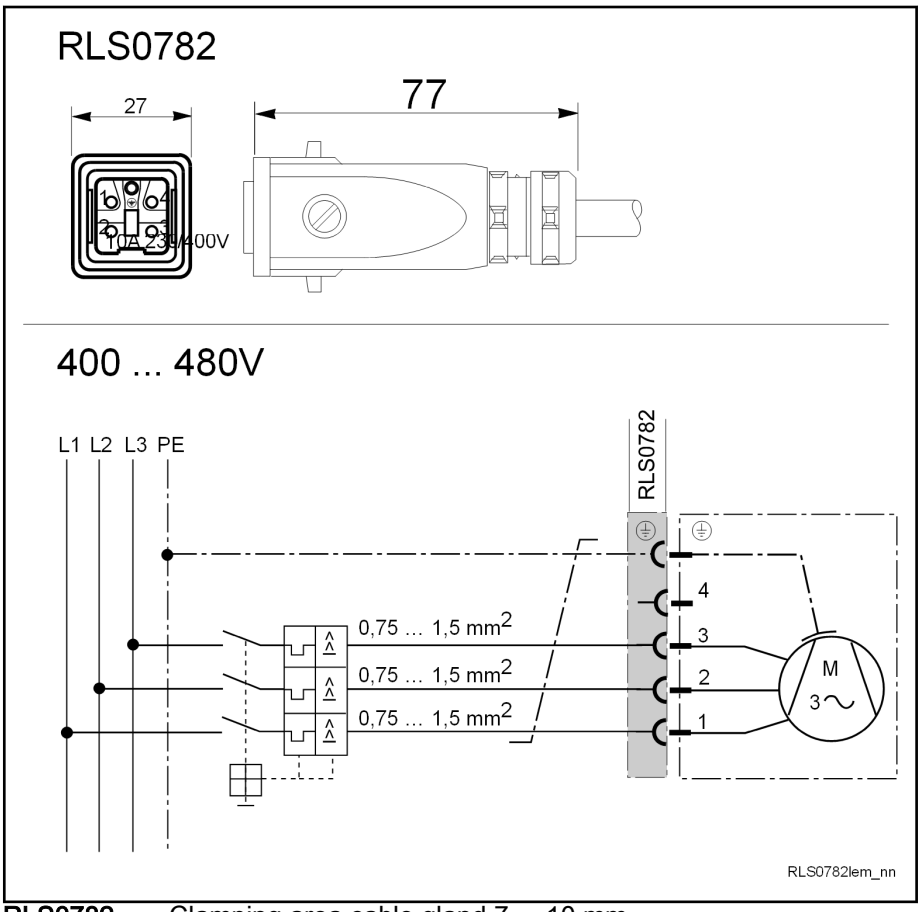

RLS0782 Clamping area cable gland 7 ... 10 mm

Fig. 7-3: Fan connection 3-phase with protection switch

Protection due to motor protection switch

The activation of the fan units is done via the adjustable motor protection device.

The activate principle of the motor protection switch is based on the fact that the motor current-carrying bimetal trip heats up faster than the motor winding and it separates this from the mains before critical temperature values are reached.

The motor protection switches are adjusted to the rated current of the fan unit. Heed when selecting the motor protection switch that the adjustable range must agree with the rated current of the fan unit.

7.1.6 Ordering Fan Units

Motor with attached fan unit

In order to procure a motor with attached fan unit, the type designation of the fan unit must be specified as an ordering subitem of the motor with the fan arrangement desired.

Ordering item	Ordering designation
1	Synchronous motor MSK100B-0300-NN-S1-BG1-NNNN
1.1	Fan unit LEM-AB-192T-11-NNNN mounted on position 1

Motor with separate fan unit

If it is specified as an independent ordering item, the fan unit is supplied separately from the motor (i.e. not attached to the latter).

Ordering item	Ordering designation
1	Synchronous motor MSK100B-0300-NN-S1-BG1-NNNN
2	Fan unit LEM-AB-192T-11-NNNN

Accessories

7.1.7 Assembly Fan Units

Assembly Fan Unit Axial, Flange Dimension 116/140

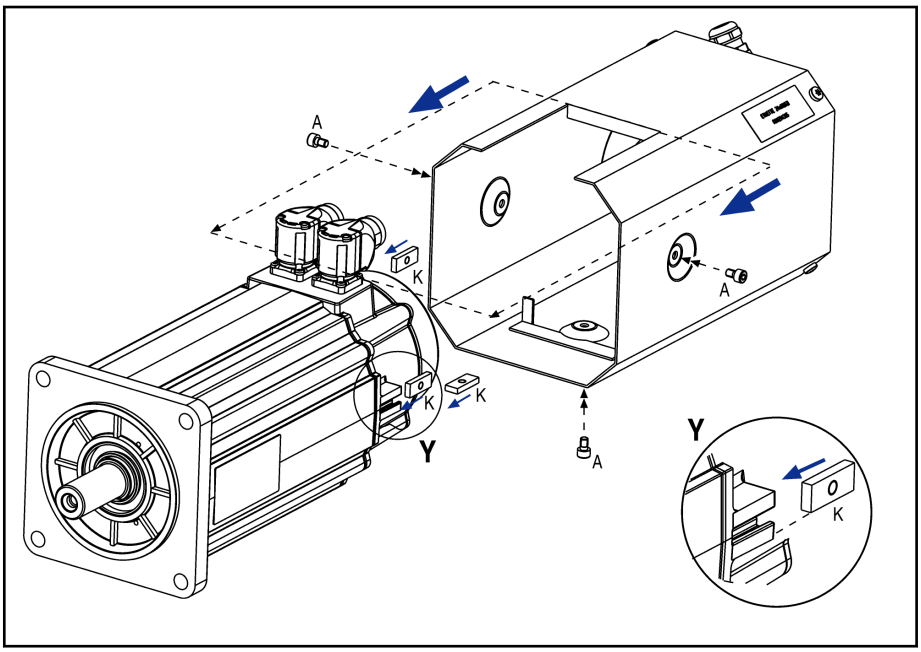

Fig. 7-4: Assembly Fan Unit Axial, Flange dimension 116/140

Part	Designation	Type	L/B/H [mm]	Screw	M_A[Nm]	Number
K	Ridge	LEM-AB116T	25/8/3	-	-	3
K	Ridge	LEM-AB140T	25/10/4	-	-	3
A	Fastening screw	LEM-AB116T	-	M5 x 8	4.0	3
A	Fastening screw	LEM-AB140T	-	M5 x 8	6.0	3

Tab. 7-6: Assembly Fan Unit Axial, Flange dimension 116/140

1. Insert the ridges K as far as it will go into the groovings on the end shield.
2. Insert the fan unit onto the end shield.
3. Tighten the fastening screws A. For tightening torque see table. Use screw lock Loctite® 243™ or locking washers.
4. Electrical connection according to the connection plan.

Assembly Fan Unit Axial, Flange Dimension 192

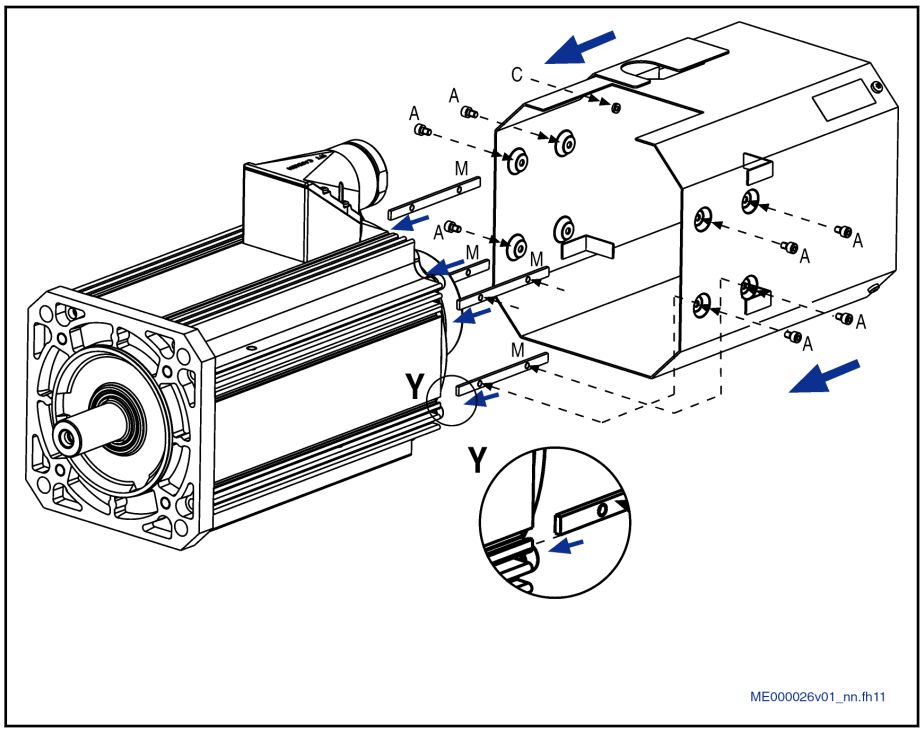

Fig. 7-5: Assembly Fan Unit Axial, Flange Dimension 192

Part	Designation	Type	L/B/H [mm]	Screw	M_A[Nm]	Number
M	Ridge	LEM-AB192T	113/8/3	-	-	4
A	Fastening screw	LEM-AB192T	-	M5 x 8	4.0	8
C	Cover of encoder cable output	LEM-AB192T	-	M4 x 8	3.1	3

Tab. 7-7: Assembly Fan Unit Axial, Flange Dimension 192

1. Insert the ridges M into the groovings on the housing.
2. Insert the fan unit as far as it will go onto the housing.
3. Tighten the fastening screws A. For tightening torque see table. Use screw lock Loctite® 243™ or locking washers.
4. If necessary loosen the cover of the encoder cable output, connect the encoder cable and mount the cover. Refer to the table for tightening torque of the fastening screws for the cover encoder cable output.
5. Electrical connection according to the connection plan.

Accessories

Assembly Fan Unit Axial, Flange Dimension 116/140

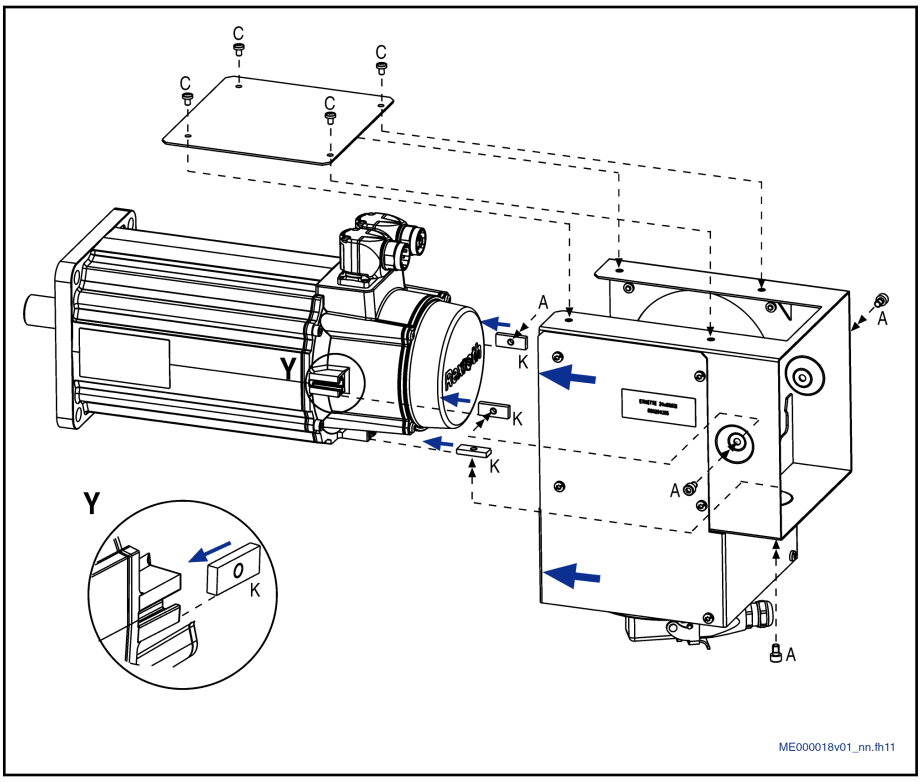

Fig. 7-6: Assembly Fan Unit Radial, Flange Dimension 116/140

Part	Designation	Type	L/B/H [mm]	Screw	M_A[Nm]	Number
K	Ridge	LEM-AB116T	25/8/3	-	-	3
K	Ridge	LEM-AB140AT	25/10/4	-	-	3
A	Fastening screw	LEM-AB116NT	-	M5 x 8	4.0	3
A	Fastening screw	LEM-AB140AT	-	M5 x 8	6.0	3
C	Fastening screw	LEM-AB116NT	-	M4 x 6	3.1	4
C	Fastening screw	LEM-AB140AT	-	M4 x 6	3.1	4

Tab. 7-8: Assembly Fan Unit Radial, Flange Dimension 116/140

1. Insert the ridges K as far as it will go into the groovings on the end shield.
2. Insert the fan unit onto the end shield.
3. Tighten the fastening screws A. For tightening torque see table. Use screw lock Loctite® 243™ or locking washers.
4. Mount the cover plate with fastening screws C. For tightening torque see table.
5. Electrical connection according to the connection plan.

Assembly Fan Unit Radial, Flange Dimension 192

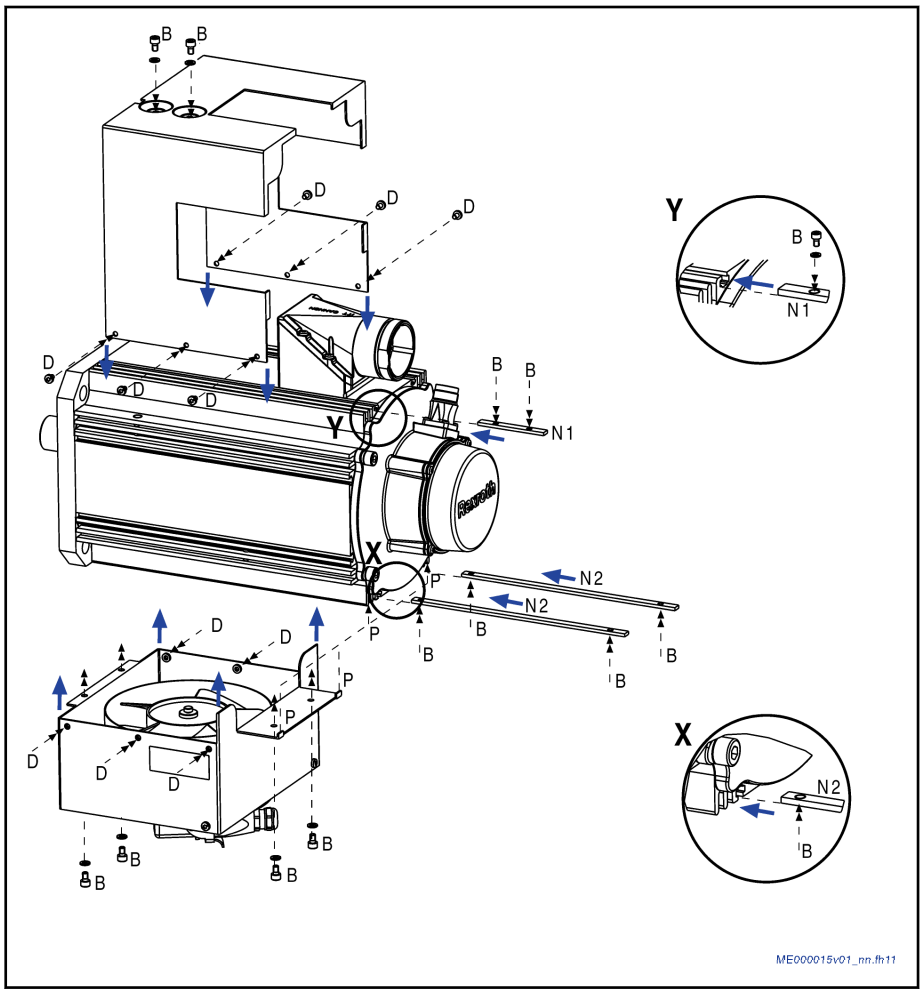

Fig. 7-7: Assembly Fan Unit Radial, Flange Dimension 192

Part	Designation	Type	L/B/H [mm]	Screw	M_A[Nm]	Number
N1	Ridge	LEM-RB192T	73/8/3	-	-	1
N2	Ridge	LEM-RB192T	223/8/3	-	-	2
B	Fastening screw	LEM-RB192T	-	M5 x 10	4.0	6
D	Fastening screw	LEM-RB192T	-	M4 x 8	3.1	6

Tab. 7-9: Assembly Fan Unit Radial, Flange Dimension 192

1. Insert the ridges N2 into the groovings onto the housing (see item X).
2. Fasten the fan top with the fastening screws B (4 pieces) into the ridges N2 on the motor housing. Use the limit stop P for positioning. For tightening torque see table.
3. Mount the cover with the fastinging screws D on the fan top. For tightening torque see table. Use screw lock Loctite® 243™ or locking washers.
4. Insert the ridges N1 into the groovings onto the housing (see item Y).
5. Screw the cover with fastening screws B (2 pieces) into the ridge N1. For tightening torque see table.
6. Electrical connection according to the connection plan.

Accessories

Assembly Fan Unit Axial, Flange Dimension 260

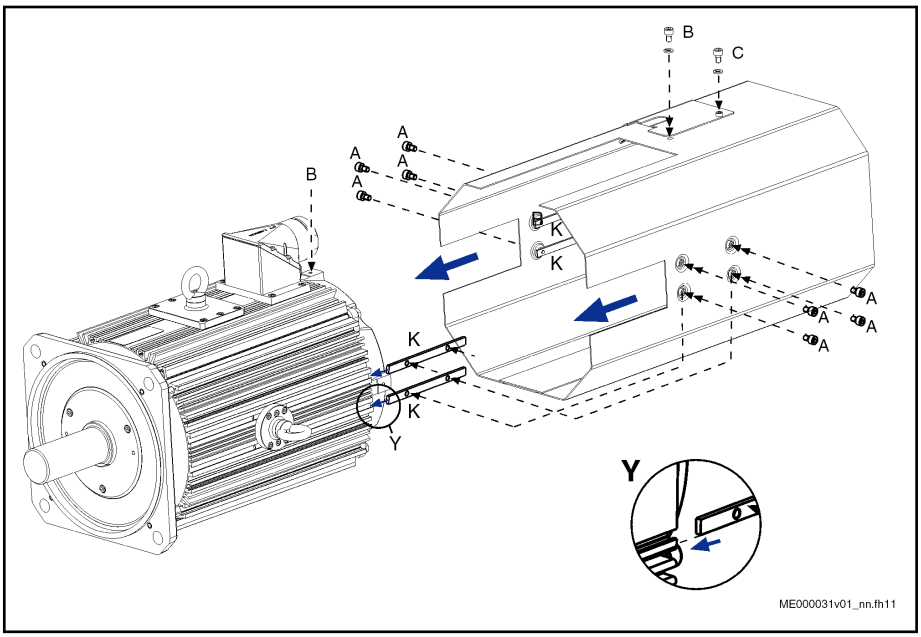

Fig. 7-8: Assembly Fan Unit Axial, Flange Dimension 260

Part	Designation	Type	L/B/H [mm]	Screw	M_A[Nm]	Number
K	Ridge	LEM-AB260N	110x10x3	-	-	4
A	Fastening screw	LEM-AB260N	-	M5x6	6.1	8
B	Fastening screw	LEM-AB260N	-	M5x8	4.0	1
C	Fastening screw encoder cover	LEM-AB260N	-	M5x6	6.1	2

Tab. 7-10: Assembly Fan Unit Axial, Flange Dimension 260

1. 1. Insert the ridges K into the groovings onto the housing (see item Y).
2. 2. Fasten the fan top with the fastening screws A (8 pieces) into the ridges K on the motor housing. Use the fastening screws C for positioning. For tightening torque see table. Use screw lock Loctite® 243™ or locking washers.
3. 3. If necessary loosen the cover of the encoder cable output, connect the encoder cable and mount the cover. Refer to the table for tightening torque of the fastening screws for the cover encoder cable output.
4. 4. Electrical connection according to the connection plan.

7.2 Gearboxes

The gearboxes of the series

- GTM
- GTE

are optimally adjusted for the motors of the IndraDyn S series. The technical data, as well as the various transformation ratios, are described in a detailed document.

The product documentation of the gearboxes can be ordered at your responsible sales partner with the following ordering designations.

DOK-GEAR-GTE********-PRxx-EN-P**

DOK-GEAR**-GTM********-PRxx-EN-P

Heed when using gearboxes from other manufacturers:

⚠ CAUTION **Motor damage by intrusion of liquid!**

Pending liquids (e.g. cooling lubricants, gearbox oil, etc.) at the drive shaft are inadmissible.

When installing gearboxes please use gearboxes with closed (oil-proof) lubrication system only. Gearbox oil should not be in permanent contact with the shaft sealing ring of the motors.

7.3 Sealing Air Connection

7.3.1 Description

Air sealing connection kits make is possible to bring in a defined overpressure into the inner motor. This procedure reliably prevents damaging fluids from penetrating through sealing points that are at risk. The areas of application for sealing air are all installation locations in which humid air or coolant can come into direct contact with the motors, especially in wetrooms.

☞ Damage due to continuously existing liquid on the shaft sealing ring!

The use of sealing air does **not** prevent the penetration of continuously existing liquid on the shaft sealing ring (e.g. for open gearboxes). Due to capillary effects gearbox-oil can penetrate into the motor and lead to damage despite using sealing air.

7.3.2 Technical Data

Designation	Value
Working pressure	0.1 ± 0.05 bar
Max. relative air humidity	20…30 %
Air	free from dust and oil
Required compressed air hose	4 × 0.75 (not included in scope of delivery)

Tab. 7-11: Technical data for IndraDyn S sealing air connection

7.3.3 Ording Designations and Assignment

Select the sealing air accessory for the motor type required from the following table

Accessories

Air-pressure Connector Kit	Order number	Motors
SUP-M01-MSK	R911306562	MSK030 MSK040 MSK050 MSK060 MSK061 MSK070 MSK071 MSK075 MSK076 MSK103
SUP-M02-MSK	R911315974	MSK100 MSK101 MSK131

Tab. 7-12: Selection sealing air accessory

7.3.4 Mounting Instruction

Retrofitting of IndraDyn S - SUP-M01-MSK

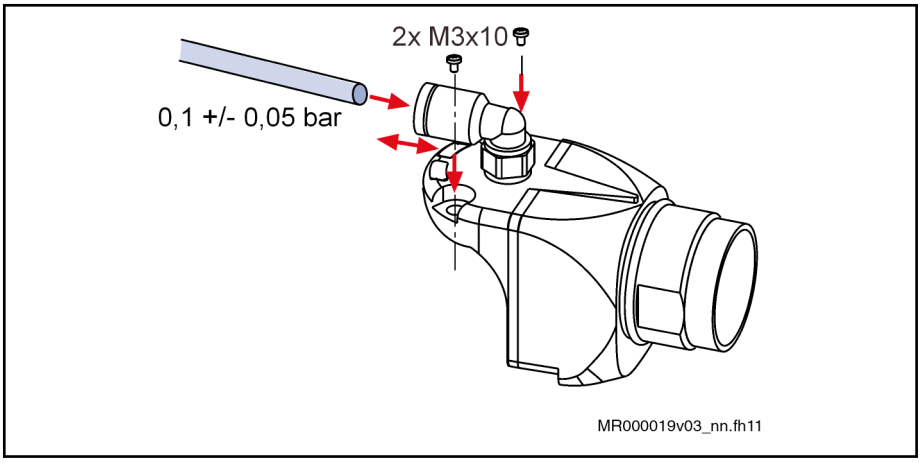

Fig. 7-9: RGS1000 with sealing air connection

⚠ DANGER **Electrocution by live parts of more than 50V!**

Open connectors of the motor only when the system has been de-energized.

1. Open the main switch
2. Ensure that the main switch cannot be accidentally switched on again
3. Loosen the screws of the encoder plug cover and remove the cover.
4. Assemble the air-pressure connector kit

☞ When positioning the cover, ensure that the cable wires and seals are not damaged.

Screw the encoder plug cover with the air-pressure connector kit onto the motor. Tightening torque of the screws 1.3 Nm.

5. Connect the quick-acting pneumatic coupling of the accessory set to the regulated compressed air source.

The sealing air unit is now ready for operation.

Retrofitting of IndraDyn S - SUP-M02-MSK

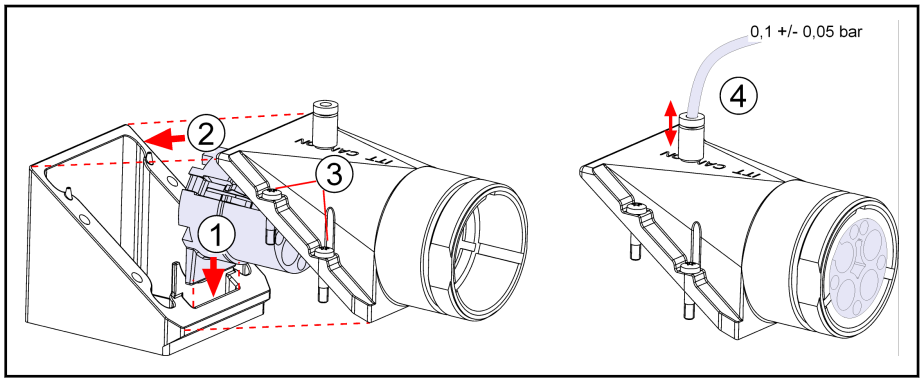

Fig. 7-10: RLS1300 with sealing air connection

⚠ DANGER **Electrocution by live parts of more than 50V!**

Open connectors of the motor only when the system has been de-energized.

1. Open the main switch
2. Ensure that the main switch cannot be accidentally switched on again
3. Loosen the screws of the power connector cover and remove the cover.
4. Assemble the air-pressure connector kit

☞ When positioning the cover, ensure that the cable wires and seals are not damaged.

Screw the power connector cover with the air-pressure connector kit onto the motor. Tightening torque of the screws 3.1 Nm.

5. Connect the quick-acting pneumatic coupling of the accessory set to the regulated compressed air source.

   The sealing air unit is now ready for operation.

8 Connection Technique

8.1 Electric Connection Technique Overview

The electrical connections of IndraDyn S motors are standardized over all frame sizes. IndraDyn S motors are provided with

- a power connector, incl. connection for temperature sensor and holding brake,
- an encoder connection.

For design of electrical connections refer to the following table. Ready-made connection cables are available for all connection variants. This ensures a simple, fast and error-free assembly and start-up.

Motor	Power connection	Encoder connection
MSK030	RLS1100 (flange socket)	RGS1000 (flange socket)
MSK040	RLS1100 (flange socket)	RGS1000 (flange socket)
MSK043[1)]	RLS1100 (flange socket)	RGS1000 (flange socket)
MSK050	RLS1100 (flange socket)	RGS1000 (flange socket)
MSK060	RLS1100 (flange socket)	RGS1000 (flange socket)
MSK061	RLS1100 (flange socket)	RGS1000 (flange socket)
MSK070	RLS1200 (flange socket)	RGS1000 (flange socket)
MSK071	RLS1200 (flange socket)	RGS1000 (flange socket)
MSK075 [1)]	RLS1200 (flange socket)	RGS1000 (flange socket)
MSK076	RLS1100 (flange socket)	RGS1000 (flange socket)
MSK100	RLS1300 (flange socket)	RGS1003 (flange socket)
MSK101	RLS1300 (flange socket)	RGS1003 (flange socket)
MSK103A [1)]	RLS1100 (flange socket)	RGS1000 (flange socket)
MSK103B [1)] MSK103D [1)]	RLS1200 (flange socket)	RGS1000 (flange socket)
MSK131 [1)]	RLS1300 (flange socket)	RGS1003 (flange socket)
MSK133B [1)]	RLK1200 (terminal box)	RGS1001 (flange socket)
MSK133C, -D, -E [1)]	RLK1300 (terminal box)	RGS1001 (flange socket)

1) Motor not availabe in ATEX design

Tab. 8-1: Electrical connection for MSK motors

The interconnection diagram applies to all IndraDyn S motors.

Connection Technique

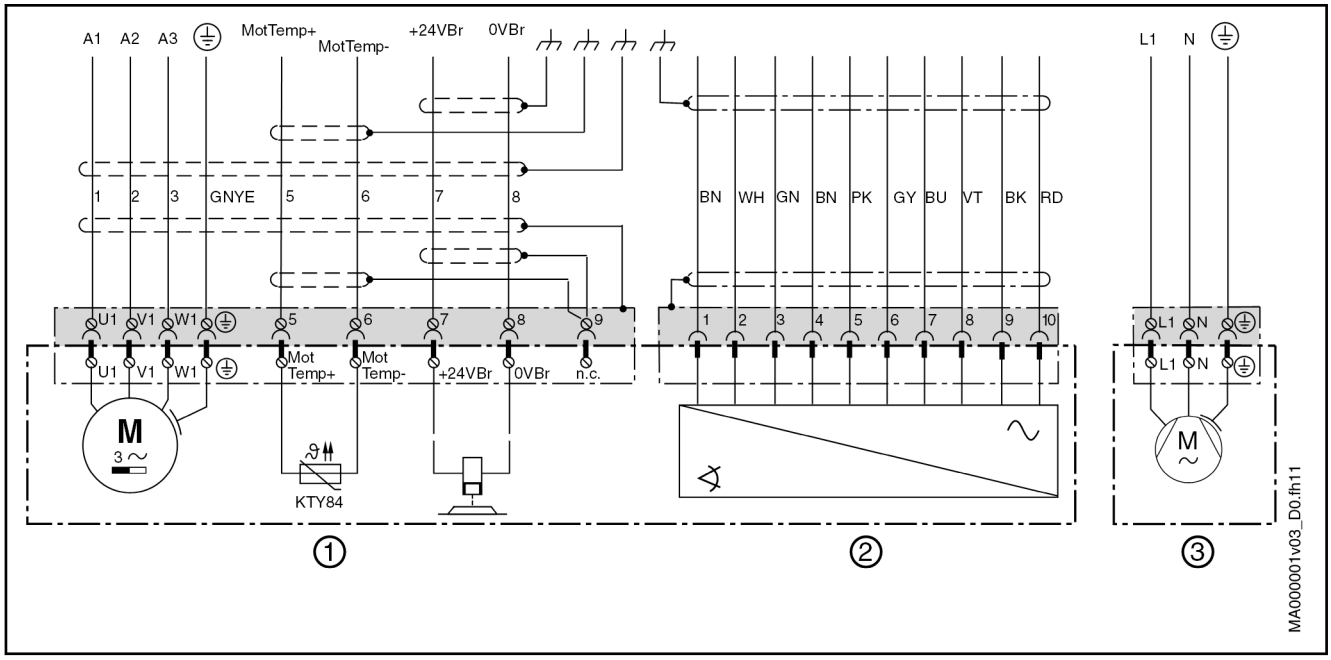

① Power connection with temperature sensor and holding brake (figure shows connector design)
② Encoder connection
③ optional fan connection (operation with a fan unit is not permitted for motors in ATEX design!)

Fig. 8-1: Overview of IndraDyn S connections I

8.2 Power Connector

M23 RLS1100 flange socket

View	Pol pattern
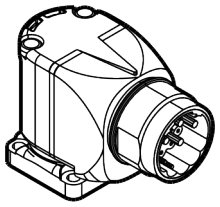	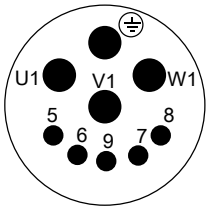 U1 A1 W1 A2 V1 A3 ⏚ PE 5 MotTemp+ 6 MotTemp- 7 +24VBr 8 0VBr 9 n.c.

Technical Data	
Connector size	M23, rotatable
Degree of protection	IP67 (connected)
Temperature range	-40 … +125 °C
Surrounding air temperature during operation	40 °C
Contact type	Pins
Rated voltage	630 V / 125 V
Rated current	23 A
Degree of pollution	3

View	Pol pattern
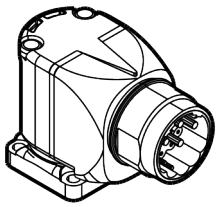	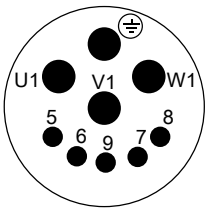 U1 A1 W1 A2 V1 A3 ⏚ PE 5 MotTemp+ 6 MotTemp- 7 +24VBr 8 0VBr 9 n.c.
Overvoltage category	III (DIN VDE 0110)
Related power connector	RLS1101 for wire cross section 1.0 and 1.5 mm^2 RLS1108 for wire cross section 2.5 mm^2

Tab. 8-2: Technical data - RLS1100

M40 Flange socket RLS1200

View	Pol pattern
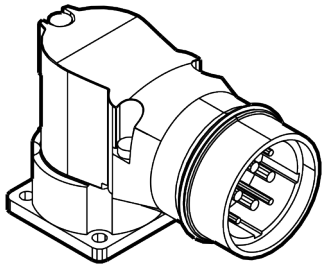	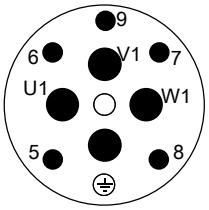 U1 A1 W1 A2 V1 A3 ⏚ PE 5 MotTemp+ 6 MotTemp- 7 +24VBr 8 0VBr 9 n.c.
Technical Data	
Connector size	M40, rotatable
Degree of protection	IP67 (connected)
Temperature range	-40 … +125 °C
Surrounding air temperature during operation	40 °C
Contact type	Pins
Rated voltage	630 V / 125 V
Rated current	57 A
Degree of pollution	3
Overvoltage category	III (DIN VDE 0110)
Related power connector	RLS1201

Tab. 8-3: Technical data - RLS1200

Connection Technique

M58 Flange Socket RLS1300

View	Pol pattern
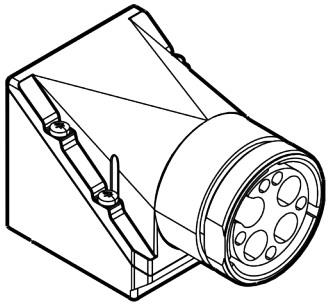	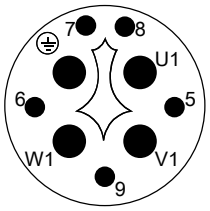 U1 A1 W1 A2 V1 A3 ⏚ PE 5 MotTemp+ 6 MotTemp- 7 +24VBr 8 0VBr 9 n.c.

Technical Data	
Connector size	M58, fixed
Degree of protection	IP67 (connected)
Temperature range	-40 … +125 °C
Surrounding air temperature during operation	40 °C
Contact type	Pins
Rated voltage	600 V
Rated current	100 A (acc. to VDE and UL); 87 A (acc. to CSA)
Degree of pollution	3
Overvoltage category	III (DIN VDE 0110)
Related power connector	RLS1301

Tab. 8-4: Technical data - RLS1300

Flange socket 1~ RLS0779 for LEM Fan Unit

View	Pol pattern
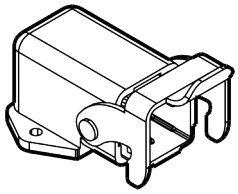	RLS0779 (115 V) 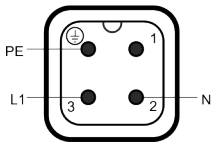 RLS0779 (230 V) 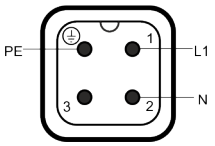

Technical Data	
Connector mode	fixed
Degree of protection	IP65 (connected)
Temperature range	-40 … +120 °C
Surrounding air temperature during operation	40 °C
Contact type	Pins
Rated voltage	L-PE 250 V / L-L 400 V (UL / CSA 600 V)
Rated current	10 A
Degree of pollution	3
Related power connector	RLS0780

Tab. 8-5: Technical data RLS0779

Flange socket 3~ RLS0781 for LEM Fan Unit

View	Pol pattern
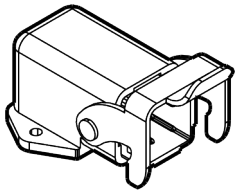	RLS0781 (400 V) 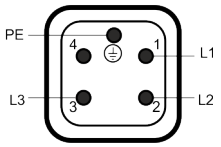

Technical Data	
Connector mode	fixed
Degree of protection	IP65 (connected)
Temperature range	-40 … +120 °C
Surrounding air temperature during operation	40 °C
Contact type	Pins
Rated voltage	400 V (UL / CSA 600 V)
Rated current	10 A
Degree of pollution	3
Related power connector	RLS0782

Tab. 8-6: Technical data RLS0781

8.3 Encoder Connector

M23 Flange Socket RGS1000

View	Pol pattern
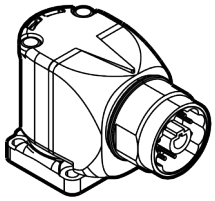	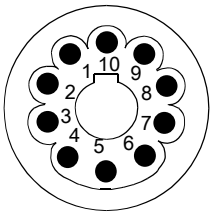 1 VCC_Encoder 2 GND_Encoder 3 A+ 4 A- 5 B+ 6 B- 7 Enc_Data+ 8 Enc_Data- 9 Enc_CLK+ 10 Enc_CKL-

Technical Data	
Connector size	M23, rotatable
Degree of protection	IP67 (connected)
Temperature range	-40 … +125 °C
Surrounding air temperature during operation	40 °C
Contact type	Pins
Rated voltage	125 V
Rated current	0.5 A
Degree of pollution	3
Overvoltage category	III (DIN VDE 0110)
Related power connector	RGS1001

Tab. 8-7: RGS1000 specifications

Connection Technique

M23 Flange Socket RGS1003

View	Pol pattern
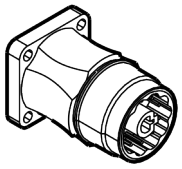	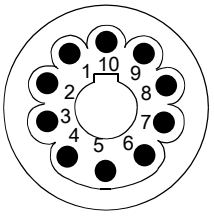 1 VCC_Encoder 2 GND_Encoder 3 A+ 4 A- 5 B+ 6 B- 7 Enc_Data+ 8 Enc_Data- 9 Enc_CLK+ 10 Enc_CKL-

Technical Data	
Connector size	M23, fixed
Degree of protection	IP67 (connected)
Temperature range	-40 … +125 °C
Surrounding air temperature during operation	40 °C
Contact type	Pins
Rated voltage	125 V
Rated current	0.5 A
Degree of pollution	3
Overvoltage category	III (DIN VDE 0110)
Related power connector	RGS1001

Tab. 8-8: Technical data RGS1003

8.4 Connector, Rotatable

The orientation of the flange socket is adjustable. To change the orientation, screw a coupling completely to the flange socket. Then move the flange socket to the desired position, using the coupling. The possible adjustments are shown in the following figure.

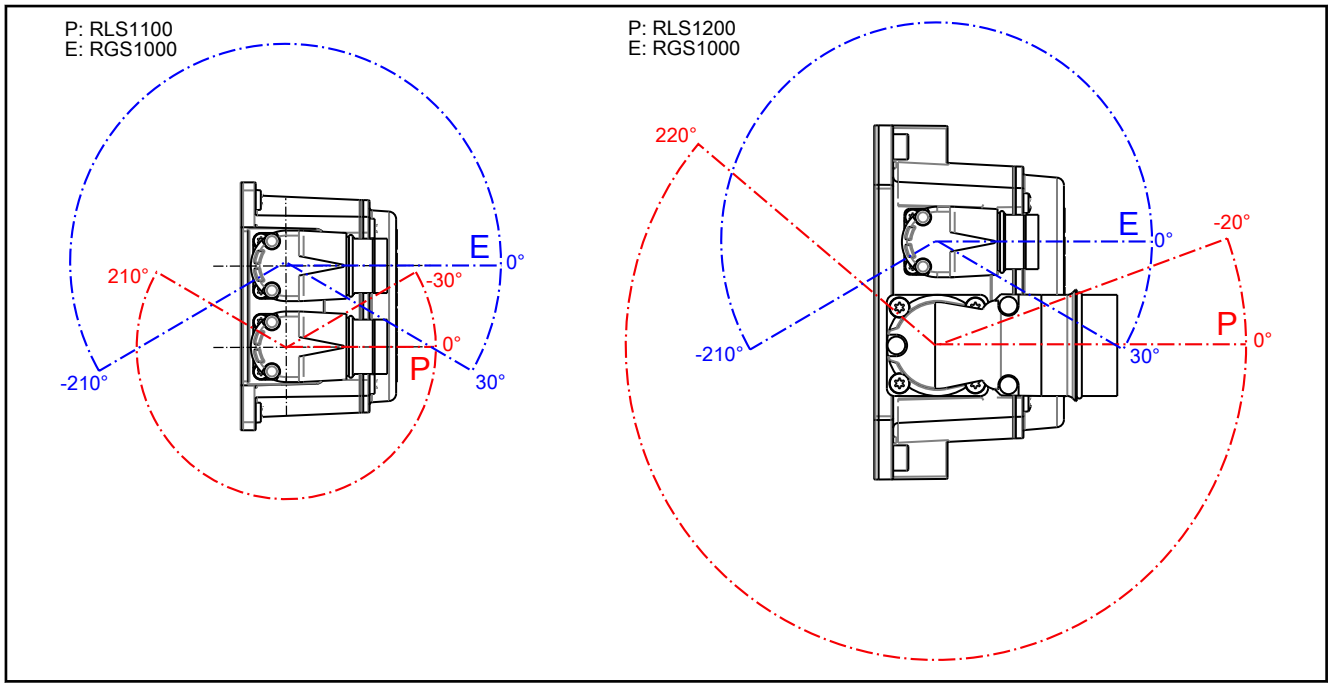

Fig. 8-2: Rotary flange socket adjustment ranges

Flange socket	Maximum turning torque 1) [Nm]
RGS1000 RGS1010 RLS1100	12
RLS1200	18

1) Maximum torque for changing the orientation of the flange sockets

Tab. 8-9: Flange socket turning torques

Connection Technique

8.5 Terminal Box RLK1200

The figure shows a terminal box, completely assembled, for double cabling.

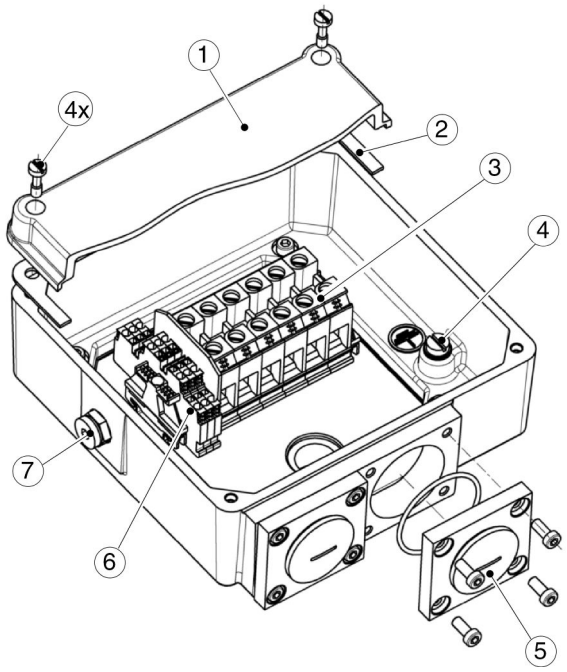

Connection components RLK1200 / RLK1201

Pos	Components within terminal box	Connection component for cable
(3)	Terminal block U-V-W	Wire end ferrule
(6)	Terminal strip (brake, temperature sensor)	Wire end ferrule
(4)	Ground terminal connection	Ring terminal M8
(5)	Adapter plate (thread metric) M25 × 1.5 / M32 × 1.5 alternatively: extension M32/40	EMC fitting

Tab. 8-10: RLK1200/RLK1201, electric connection components

☞ Terminal box with metric thread. An EMC fitting is necessary for assembly.

8.6 Terminal Box RLK1300

The figure shows a terminal box, completely assembled, for double cabling.

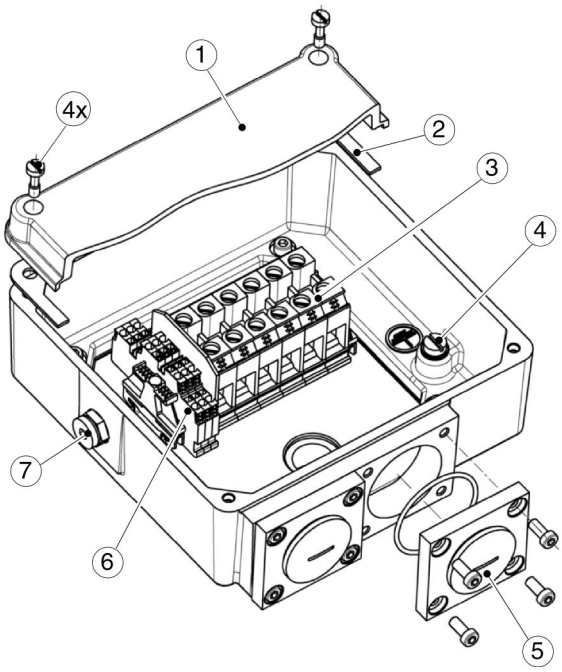

Connection components RLK1300 / RLK1301

Pos	Components within terminal box	Connection component for cable
(3)	Terminal block U-V-W	Wire end ferrule
(6)	Terminal strip (brake, temperature sensor)	Wire end ferrule
(4)	Ground terminal connection	Ring terminal M8
(5)	Adapter plate (thread metric) M25 × 1.5 / M32 × 1.5 / M40 × 1.5	EMC fitting

Tab. 8-11: RLK1300/RLK1301, electric connection components

☞ Terminal box with metric thread. An EMC fitting is necessary for assembly.

8.7 Connecting Cables

8.7.1 Ready-Made Connection Cables

Rexroth provides ready-made power and encoder cables. For cable selection refer to documentation "Rexroth Connection Cables IndraDrive and IndraDyn"; DOK-CONNEC-CABLE*INDRV-CA03-EN-P.

The reachable operating time of cables mainly depends on the mode of installation and environmental factors at the place of use. Observe the following recommendations about cable handling to ensure a long and error-free operation of the cables.

- Never apply tensile or torsional loads to the cable (torsion-resistant cables available on request)

  The ends of the cable must be mechanically fastened after 30 cm (e.g. cable saddle, shielded connection of the controllers)
- Always disconnect connections by pulling on the connector, not by pulling on the cable.
- Do not kink cables
- Do not undercut the bending radius of the cable
- Do not subject cables to high temperature differences and extreme climatic conditions; do not store them outside, store them in a dry condition
- Always unwind cables, do not unreel "over head"
- Do not use damaged cables (e.g. damaged by pressure, clamping or squashing). In the case of a damaged cable, deactivate the system and change the cable.

Observe the assembly and installation notes regarding ready-made cables in the documentation "DOK-CONNEC-CABLE*INDRV-CAxx-EN-P".

8.8 Connection Technique Fan Units

Fan units are designed with a connector with protection class IP 65. Connectors are delivered with the fan units, which must be connected on the customer-side. Also observe the instructions in chapter 7.1 "Fan Units for MSK Motors" on page 179.

8.9 Coolant Connection Liquid Cooling

Installation material like tubes and fastening clamps do not belong to the scope of delivery. Select a supply hose with the correct inner diameter.

Coolant connection

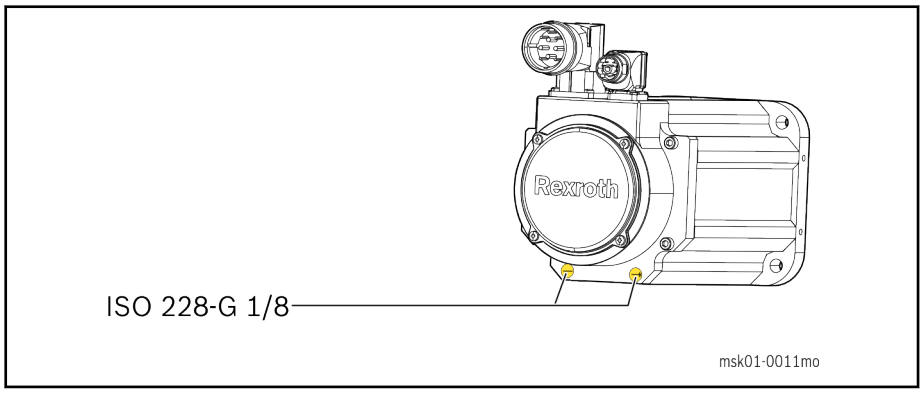

Fig. 8-3: Coolant connection MSK071, MSK075

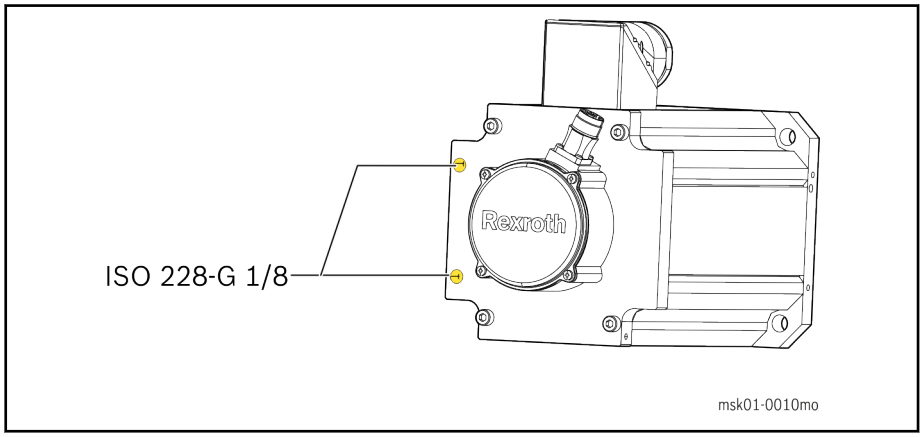

Fig. 8-4: Coolant connection MSK101

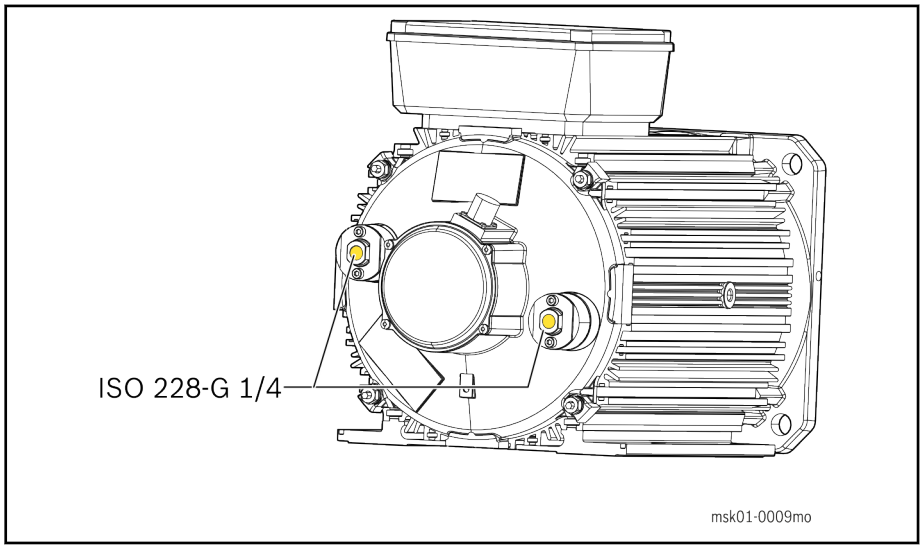

Fig. 8-5: Coolant connection MSK133

☞ The arrangement of intake (IN) and outtake (OUT) can done arbitrary and does not have any influence on the power data of the motor.

The connecting threads on the motor are covered with factory-attached protective caps. These protective plugs may only be removed immediately before screwing in the coolant lines or the quick coupling to prevent dirt from entering into the cooling system.

The following table shows the loads allowed for the motor-sided connection threads.

Motor	Connection	Screw-in depth [mm]	Tightening torque [Nm]
MSK071	Pipe thread ISO228-G 1/8	9	14 ... 15
MSK075			
MSK101	Pipe thread ISO228-G 1/8	10	14 ... 15
MSK133	Pipe thread ISO228-G 1/4	14	18 ... 20

Tab. 8-12: Coolant port thread, allowed tightening torques and screw-in depths

NOTICE **The coolant port threads on the motor may be destroyed by incorrect tightening torques!**

The allowed motor connection tightening torque may not be exceeded! If the tightening torque or screw-in depth is exceeded, the motor may be damaged irreversibly.

The motor-sided coolant ports are provided for coolant port connections with axial seal.

Bosch Rexroth therefore recommends to use screw connections which already contain an O-ring for sealing the screw connection in axial direction.

For example, seals consisting of hemp, teflon tape or cone-shaped screw connections are not considered to be suitable because this type of seal may stress the connection thread on the motor to an unreasonably high extent and/or damage it permanently.

☞ The machine manufacturer is responsible for ensuring that the coolant port is tight and for verifying and accepting this tightness after the motor has been installed.

Moreover, the maintenance schedule of the machine should provide for a regular check of the proper state of the cooling port.

9 Operating Conditions and Application Notes

9.1 Ambient Conditions

9.1.1 Setup Elevation and Ambient Temperature

According to DIN EN 60034-1, the motor performance data specified below are valid for:

- Ambient temperatures 0 … 40 °C
- Setup elevation 0 … 1,000 m above sea level

When exceeding the given limits, the performance data of the motors must be reduced.

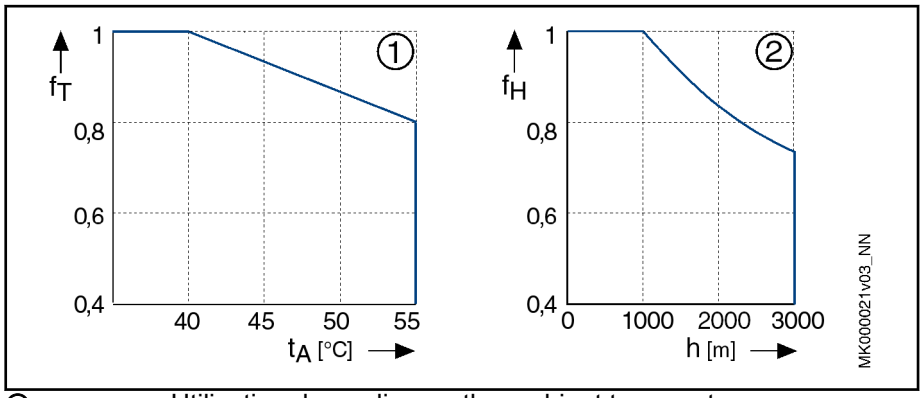

①	Utilization depending on the ambient temperature
②	Utilization depending on the installation altitude
f_T	Temperature utilization factor
t_A	Ambient temperature in degrees Celsius
f_H	Height utilization factor
h	Installation altitude in meters

Fig. 9-1: Derating of ambient temperature, installation altitude (in operation)

Calculation of performance data in case the limits specified are exceeded:

Ambient temperature > 40 °C

$M_{0_red} = M_0 \times f_T$

linstallation altitude > 1,000 m

$M_{0_red} = M_0 \times f_H$

Ambient temperature > 40 °C and **setup elevation > 1,000 m**

$M_{0_red} = M_0 \times f_T \times f_H$

9.1.2 Humidity / Temperature

Ambient climatic conditions are defined in different classes according to DIN EN 60721-3-3, Table 1. They are based on observations made over long periods of time throughout the world and take into account all influencing quantities that could have an effect, such as the air temperature and humidity.

Based on this table, Rexroth recommends class 3K4 for continuous use of the motors.

The following table provides extracts from this class.

Environmental factor	Unit	Class 3K4
Low air temperature	°C	0 [1)]
High air temperature	°C	+40
Low rel. air humidity	%	5
High rel. air humidity	%	95
Low absolute air humidity	g/m³	1
High absolute air humidity	g/m³	29
Temperature change rate	°C/min	0,5

1) Differs from DIN EN 60721-3-2
1) Rexroth permits 0 °C as the lowest air temperature.

Tab. 9-1: Classification of ambient climatic conditions according to DIN EN 60721-3-3, Table 1

9.1.3 Vibration

Vibrations are sine-wave oscillations in stationary use, which vary in their effect on the resistance of the motors depending on their intensity.

The specified limit values are valid for frequencies of 10-2,000 Hz during stimulation on the motor flange. Limitations can be necessary for occuring resonances depending from the application and installation situation.

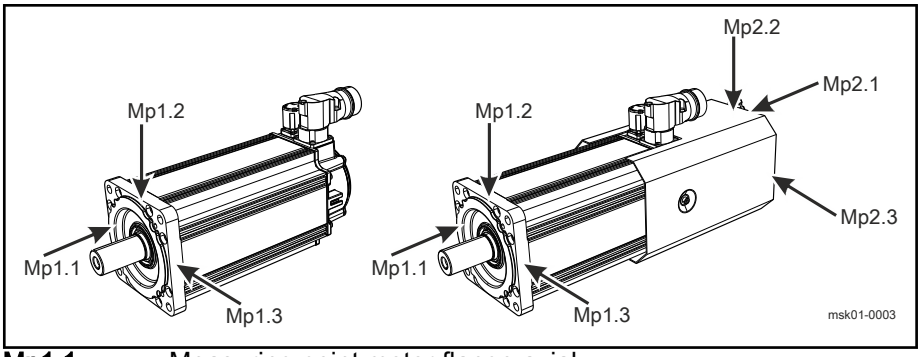

Mp1.1 Measuring point motor flange axial
Mp1.2, -1.3 Measuring point motor flange radial
Mp2.1 Measuring point fan axial
Mp2.2, -2.3 Measuring point fan radial

Fig. 9-2: Measuring points vibration load

The following limit values acc. to EN 60721-3-3 and EN 60068-2-6 are valid for MSK motors:

Direction	Measuring points	Maximum permissible vibration load (10-2,000 Hz)		
		MSK with encoder S2, S3, M1, M3	MSK with encoder S2, M2	MSK with LEM
Axial	Mp1.1	10 m/s²	10 m/s²	10 m/s²
Radial	Mp1.2 Mp1.3	30 m/s²	10 m/s²	10 m/s²

Tab. 9-2: Permissible vibration load for MSK motors

Additionally check the vibration load on the fan housing (Mp2.x) when fan mounting.

Direction	Measuring points	Maximum permissible vibration load (10-2,000 Hz)
		MSK with LEM
Axial	Mp2.1	10 m/s²
Radial	Mp2.2 Mp2.3	30 m/s²

Tab. 9-3: Permissible vibration load for MSK motors with fan unit

9.1.4 Shock

The shock load of the motors is indicated by providing the maximum permitted acceleration in non-stationary use, such as during transport.

Function-impairing effects are avoided as long as the limits specified are kept.

Based on EN 60721-3-3 and EN 60068-2-27, the following values result for Rexroth motors:

Frame size	Maximum allowed shock load (6 ms)	
	Axial	Radial
MSK030 MSK040 MSK043[1)] MSK050	10 m/s²	1,000 m/s²
MSK060 MSK061	10 m/s²	500 m/s²
MSK070 MSK071 MSK075 [1)] MSK076	10 m/s²	300 m/s²
MSK100 MSK101 MSK103 [1)] MSK131 [1)] MSK133	10 m/s²	200 m/s²

1) Motor not availabe in ATEX design

Tab. 9-4: Permitted shock load for MSK motors

Applications with continuous shock load make a case-by-case review necessary. The specified limit values are valid for half-sinus-shaped single shock load and cannot be used for continuous operation.

9.2 Degree of Protection

The protection mode acc. to EN 60034-5 is specified by the abbreviation IP (International Protection) and two numbers for the degree of protection. The first code number stands for the degree of protection against contact and ingress of foreign bodies, the second one stands for the degree of protection against ingress of water.

Motor area	Degree of protection	Remark
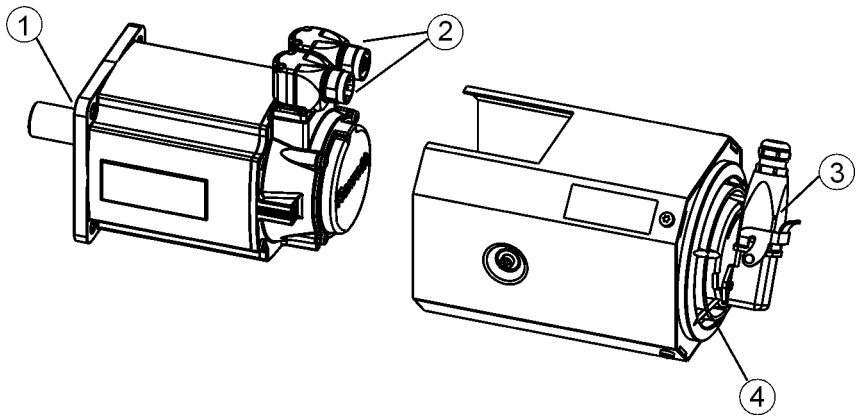		
motor housing, output shaft, motor connector when properly assembled, plugged in	IP 65	Standard design
Motor housing, output shaft, motor connector with professional assembly in connected state **and** use of sealing air	approx. IP 67	Only with sealing air kit!
Fan motor and connector in connected state	IP 65	Fan unit accessories
Fan grille	IP 24	Fan unit accessories

① Output shaft with shaft sealing ring
② Flange socket for power and encoder connection(can be optionally retrofitted for sealing air)
③ Fan motor with flange socket
④ Fan grille

Tab. 9-5: IP protection areas of MSK motors

The tests for the second code number are done with fresh water. If cleaning is effected using high pressure and/or solvents, coolants, or penetrating oils, it might be necessary to select a higher degree of protection.

9.3 Design and Installation Positions

Motor design B05			
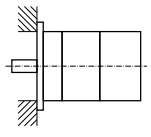	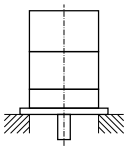	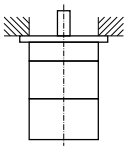	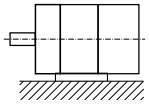
IM B5	IM V1	IM V3	IM B35
Flange attachment on the drive side of the flange	Flange attachment on the drive side of the flange, drive side facing down	Flange attachment on the drive side of the flange, drive side facing up	Flange attachment on the drive side of the flange or foot attachment

Tab. 9-6: Permissible conditions of installation according to EN 60034-7:1993

NOTICE **Motor damage due to penetration of liquids!**

If motors are attached according to IM V3, fluid present at the output shaft over a prolonged time may penetrate and cause damage to the motors.

Ensure that fluid cannot be present at the output shaft.

Foot assembly

In contrast to flange assembly, radial forces may only be effective in a direction perpendicular to the mounting surface (± 15°) if foot assembly is selected. The transmission of forces in other effective directions is not allowed.

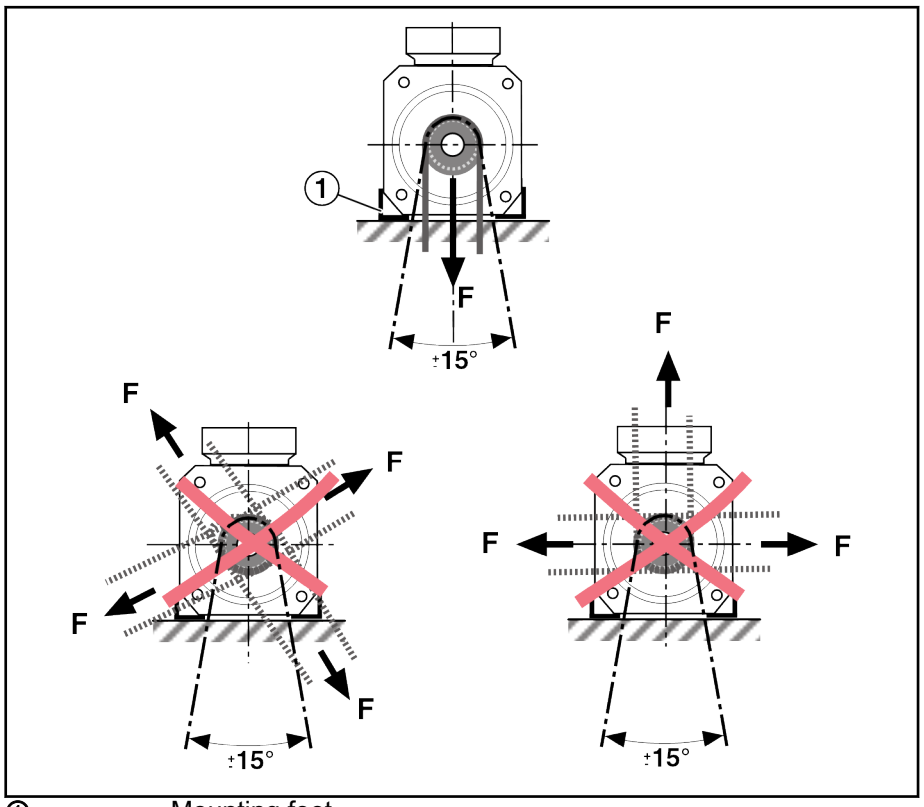

① Mounting feet

Fig. 9-3: Foot assembly

Please note the following in case of foot assembly ...

- Forces which are transmitted by a gear and have an effect on the motor feet are not allowed.

  Forces taking effect via the gear shaft must be supported against the gear.
- Incorrect installation situations give rise to forces which may cause short-term damage to the motors.
- See also the instructions on foot assembly in chapter 12.3 "Mechanical Attachment" on page 249. If necessary, consider "flange assembly" as an alternative.

9.4 Compatibility with Foreign Materials

All Rexroth controls and drives are developed and tested according to the state of the art.

However, since it is impossible to follow the continuing further development of every material with which our controls and drives could come into contact (e.g. lubricants on tool machines), reactions with the materials that we use cannot be ruled out in every case.

For this reason, you must execute a compatibility test between new lubricants, cleansers, etc. and our housings and device materials before using these products.

9.5 Motor Paint

As standard, the motors are **black (RAL9005)**.

The varnish is resistant against:

- diluted acids and lyes
- water, seawater, sewage
- current mineral oils

The varnish is partially resistant against:

- organic solvents
- hydraulic oil

The varnish is not resistant against:

- concentrated acids/lyes

An additional varnish with a coat thickness of max. 40 µm is permitted. Before painting the housing, check the adhesiveness and resistance of the new paint.

☞ Protect all safety notes, type plates and open connectors with a painting protection when painting additionally. The functionality of the motor may not be reduced by an additional varnish.

⚠ WARNING **Danger of explosion due to improper change of the surface characteristics.**

An additional varnish on motors for hazardous areas is not allowed in order not to negatively influence the surface characteristics (like e.g. insulation resistance, electrostatic charging).

9.6 Output Shaft

9.6.1 Plain Shaft

The standard design recommended for IndraDyn S motors provides a non-positive shaft-hub connection without play and excellent running smoothness. Use clamping sets, clamping sleeves or clamping elements to couple the machine elements to be driven.

9.6.2 Output Shaft with Keyway

The optional key according to DIN 6885, sheet 1, version 08-1968, permits the form-fitting transmission of torques with constant direction, with low requirements for the shaft-hub connection.

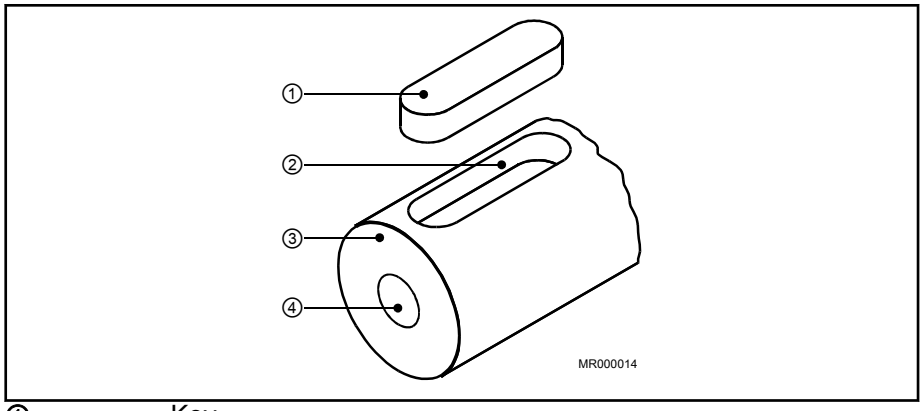

① Key
② Keyway
③ Motor shaft
④ Centering hole

Fig. 9-4: IndraDyn S Output shaft with key

The machine elements to be driven must additionally be secured in the axial direction via the centering hole on the end face.

NOTICE **Damage to property due to reversing mode!**

Shaft damage! In case of intense reversing operation, the seat of the fitting spring may deflect. Increasing deformations can lead to a break of shaft.

Preferably, use plain output shafts.

Balancing with a Complete Key

IndraDyn S motors are balanced with the **complete** key. Hence, the machine element to be driven must be balanced without a key.

Modifications to keys may be made only by the user himself and on his own responsibility. Bosch Rexroth does not assume any warranty for modified keys or motor shafts.

9.6.3 Output Shaft with Shaft Sealing Ring

IndraDyn S motors are designed with according to DIN 3760 – design A.

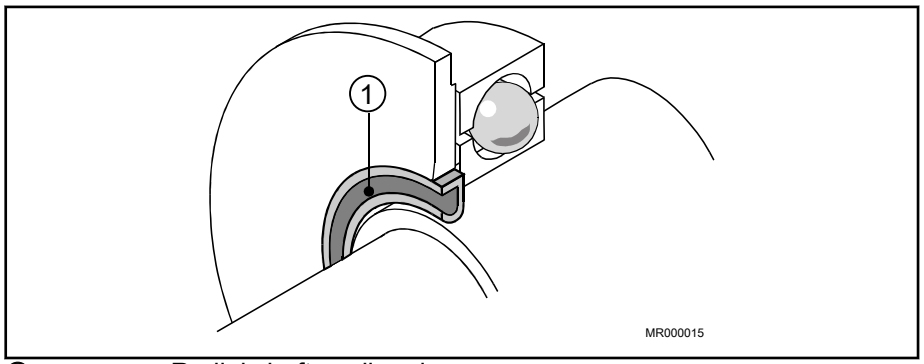

① Radial shaft sealing ring

Fig. 9-5: IndraDyn S motors radial shaft sealing ring

Wear

Radial shaft sealing rings are friction seals. Hence, they are subject to wear and generate frictional heat.

Wear of the friction seal can be reduced only if lubrication is adequate and the sealing point is clean. Here, the lubricant also acts as a coolant, supporting the discharge of frictional heat from the sealing point.

- Prevent the sealing point from becoming dry and dirty. Make sure everything is clean.

☞ Under normal environmental conditions, the shaft seal is greased for its lifetime. Under unfavorable environmental conditions (e.g. grinding dust, metal shavings), however, maintenance intervals could be necessary.

Resistance

The materials used for the radial shaft sealing rings are highly resistant to oils and chemicals. The performance test for the particular operating conditions lies, however, within the machine manufacturer's responsibility.

The complex interactions between the sealing ring, the shaft and the sealing fluid, as well as the particular operating conditions (frictional heat, soiling, etc.), do not allow calculation of the lifetime of the shaft sealing ring.

Vertical Installation Positions IM V3

The degree of protection on the flange side of motors with a shaft sealing ring is IP 65. Hence, tightness is ensured only in case of splashing fluids. Fluid levels present on the A-side require a higher degree of protection. For vertical installation position (shaft at the top) of the motor, please observe the additional notes in chapter 9.3 "Design and Installation Positions" on page 212 .

☞ Rexroth recommends that any direct contact of the drive shaft and the radial shaft sealing ring with the processing medium (coolant, material corrosion) caused by the machine or system construction be avoided.

9.7 Bearing and Shaft Load

9.7.1 Radial Load, Axial Load

During operation, both radial and axial forces act upon the motor shaft and the motor bearings. The construction of the machine, the selected motor type and the attachment of driving elements on the shaft side must be adapted to each other to ensure that the load limits specified are not exceeded.

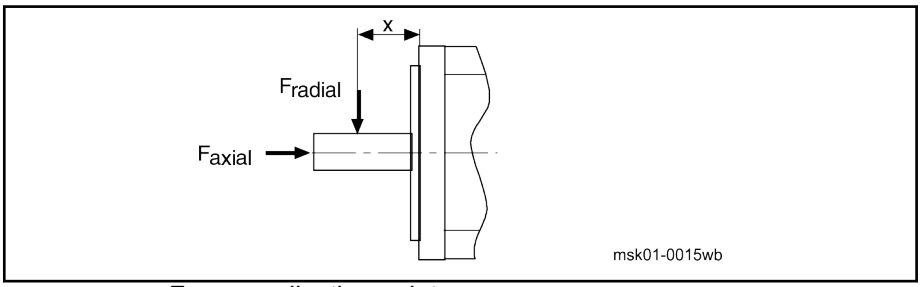

x Force application point

Fig. 9-6: Example shaft load diagram

Maximum allowed radial force

The maximum permissible radial force F_{radial_max} depends on the following factors:

- Shaft-breaking load
- Force action point x
- Smooth shaft or with key way

Allowed radial force

The permitted radial force F_{radial} depends on the following factors:

- Arithmetically averaged speed (n_{mean})
- Force action point x
- Bearing Service Life

Allowed axial force

The maximum allowed axial force F_{axial} is specified for single motor frame sizes in the following table.

Motor	F_{axial} [N]	Motor	F_{axial} [N]
MSK030	0	MSK075	60
MSK04x	30	MSK076	60
MSK050	40	MSK100	80
MSK060	40	MSK101	80
MSK061	40	MSK103	80
MSK070	60	MSK131	50
MSK071	60	MSK133	50

Tab. 9-7: Maximum allowed axial force F_{axial}

Mean Speed

The initialization and braking times can be ignored in the calculation if the time in which the drive is operated at a constant speed is significantly greater than the acceleration and deceleration times. If the mean speed is calculated according to the following equation, the acceleration and deceleration times are taken into account.

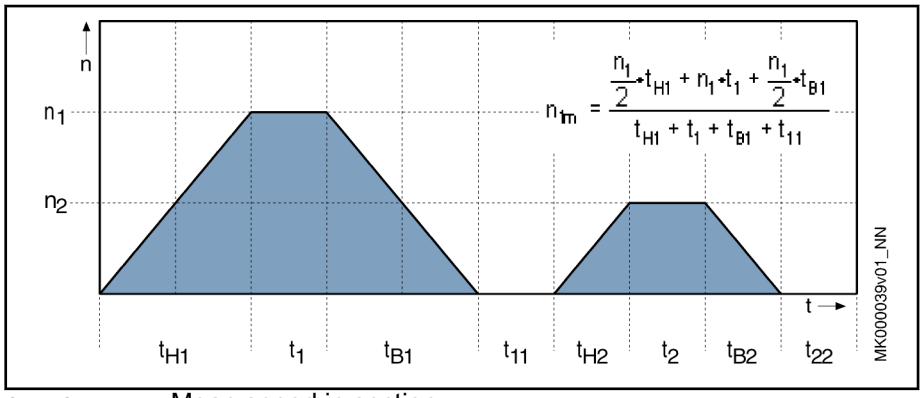

n_{1m}; n_{2m} Mean speed in section x
n_1; n_2 Machining speed
t_{H1}; t_{H1} Acceleration time
t_1; t_2 Machining time
t_{B1}; t_{B2} Deceleration time
t_{11}; t_{22} Standstill time

Fig. 9-7: Mean speed

A complete processing cycle can consist of several sections with different speeds. In this case, the average must be calculated from all sections.

Operating Conditions and Application Notes

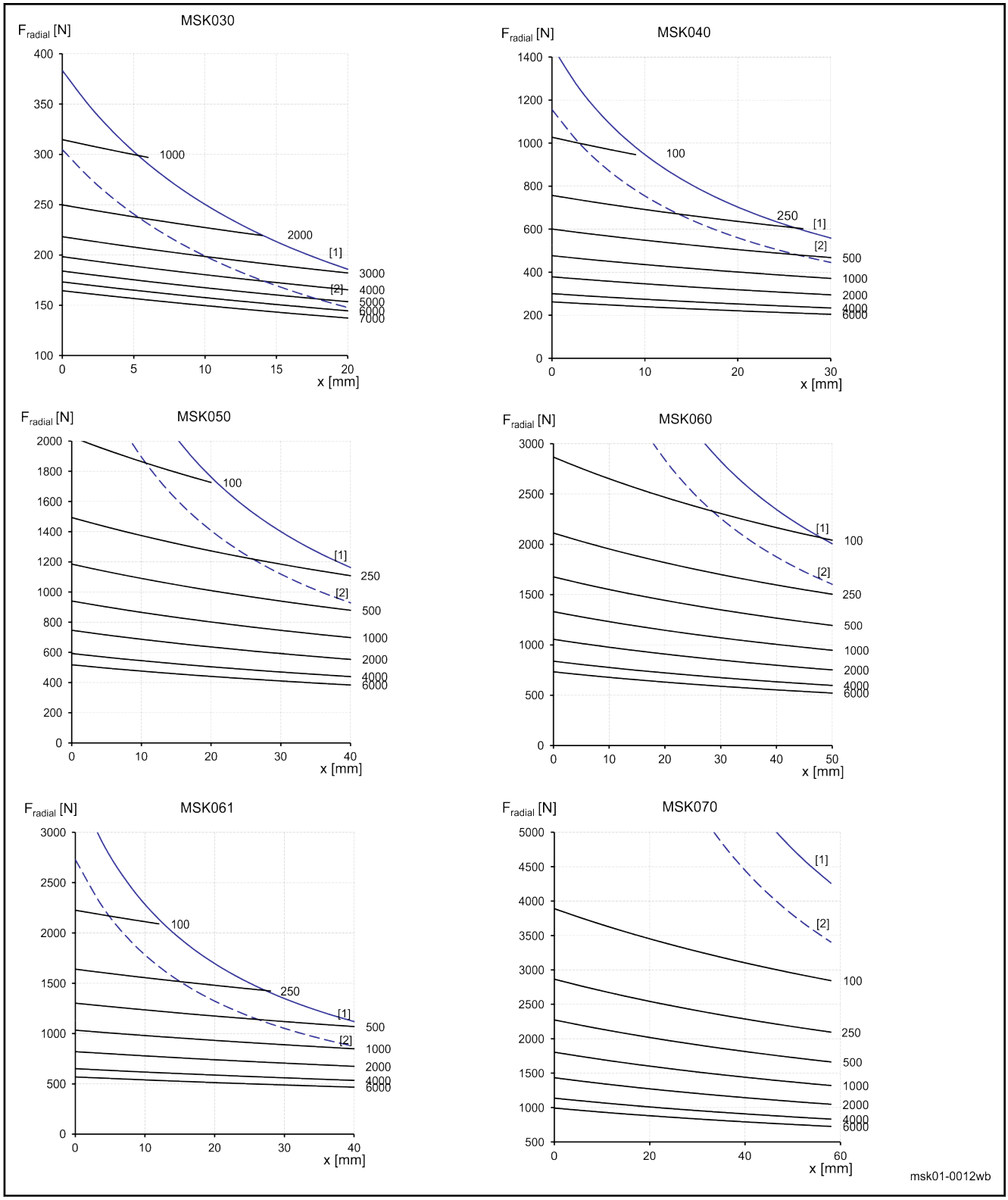

[1] Shaft, plain
[2] Shaft with keyway
n [min^{-1}] Mean speed

Fig. 9-8: Radial force F_{radial}(1)

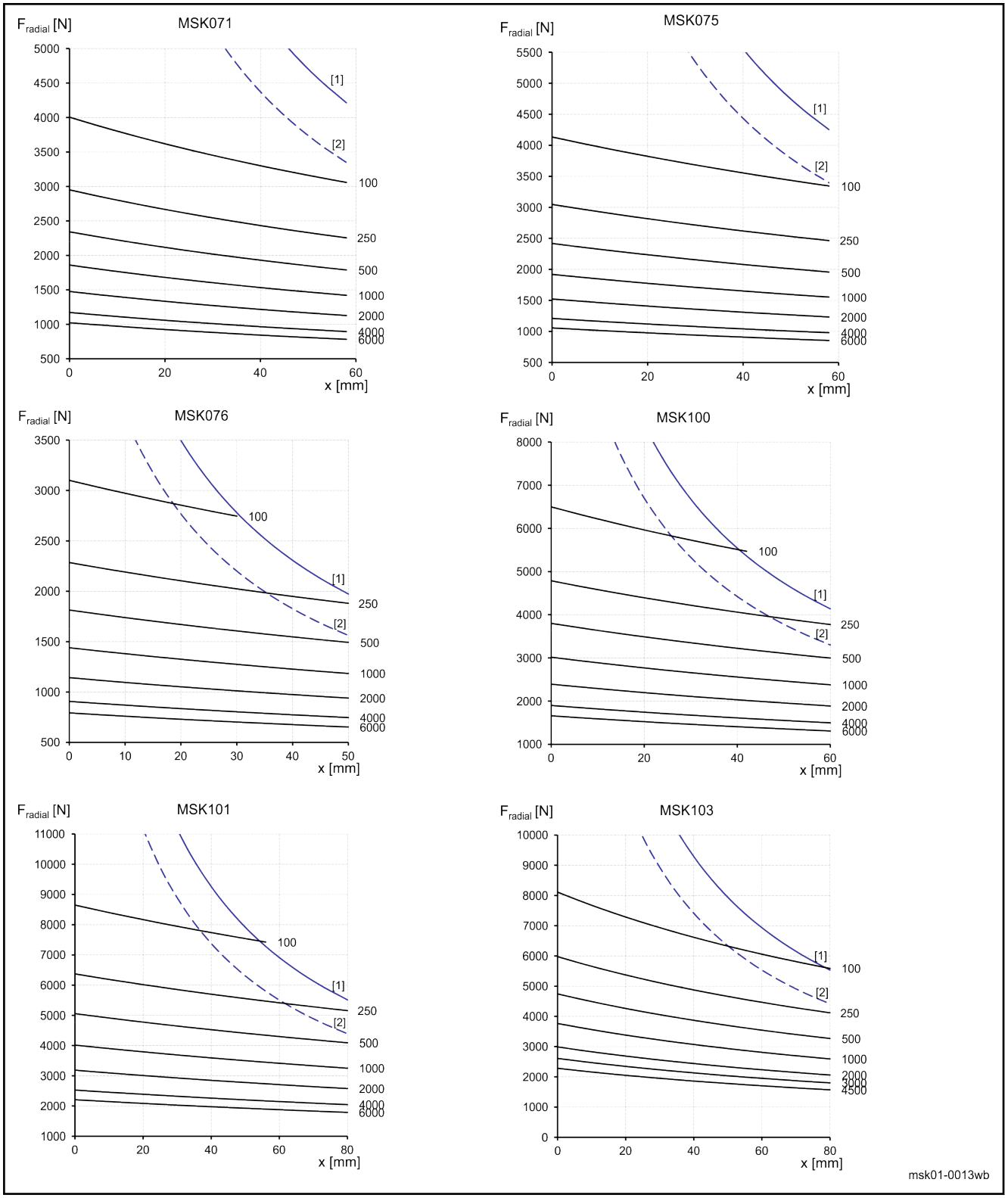

[1] Shaft, plain
[2] Shaft with keyway
n [min^{-1}] Mean speed

Fig. 9-9: *Radial force F_{radial}(2)*

Operating Conditions and Application Notes

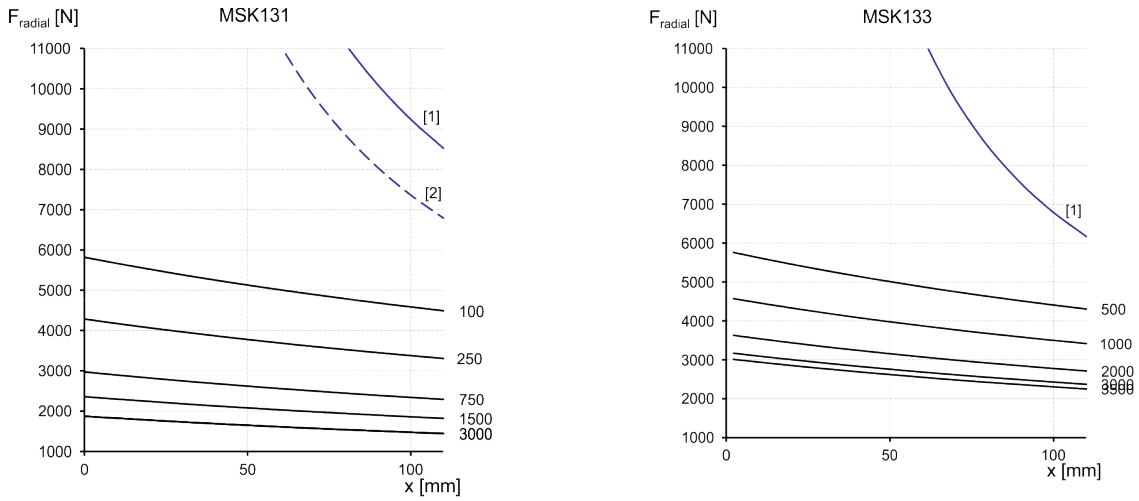

msk01-0014wb

[1] Shaft, plain
[2] Shaft with keyway
n [min^{-1}] Mean speed

Fig. 9-10: Radial force F_{radial}(3)

9.8 Bearing Lifetime

The bearing lifetime is an important criterion for the availability of IndraDyn motors.

If IndraDyn S-motors are operated within the limits specified for radial and axial loads, the bearing lifetime is as follows:

Bearing Lifetime

L_{10h} = 30,000 operating hours

(calculated according to ISO 281, ed. 12/1990)

This applies to all IndraDyn motors based on the following:

- The permitted loads from the corresponding chapter "Technical Data" are never exceeded.
- The motor is operated under the permitted conditions for use and in the permitted ambient temperature range of 0° to +40 °C.

Differing loads can have the following effects:

- Premature failure of the bearing due to increased wear or mechanical damage.
- Reduction of the grease lifetime leads to premature failure of the bearing.
- Avoid exceeding the load limits.

Mechanical Bearing Lifetime in case of Increased Radial Force

In other cases, the bearing lifetime is reduced as follows:

$$L_{10h} = \left(\frac{F_{radial}}{F_{radial_ist}}\right)^3 \cdot 30000$$

L_{10h}	Bearing lifetime (according to ISO 281, ed. 12/1990)
F_{radial}	Determined permissible radial force in N (Newtons)
F_{radial_act}	Actually acting radial force in N (Newtons)

Fig. 9-11: Calculation of the bearing service life L10h, if the permissible radial force Fradial is exceeded

☞ Under no circumstances may the actually acting radial force F_{radial_ist} be higher than the maximum permissible radial force F_{radial_max}.

Operating Conditions and Application Notes

9.9 Attachment of Drive Elements

⚠ CAUTION **Motor damage by intrusion of liquid!**

Pending liquids (e.g. cooling lubricants, gearbox oil, etc.) at the drive shaft are inadmissible.

When installing gearboxes please use gearboxes with closed (oil-proof) lubrication system only. Gearbox oil should not be in permanent contact with the shaft sealing ring of the motors.

Whenever attaching drive elements to the output shaft, such as

- Gearboxes
- Couplings
- Gear pinion

it is absolutely necessary that the following guidelines be followed.

Gearbox mounting on motors

Are gearboxes mounted on motors, the thermal coupling of the motors on machines or constructions changes.

Depending on the gearbox type, the heat development on the gearbox is different. The heat dissipation of the motor via the flange is reduced in every case when a gearbox is mounted. This must be heeded at the project planning.

A reduction of the given performance data is necessary, to do not overload motors when using gearboxes.

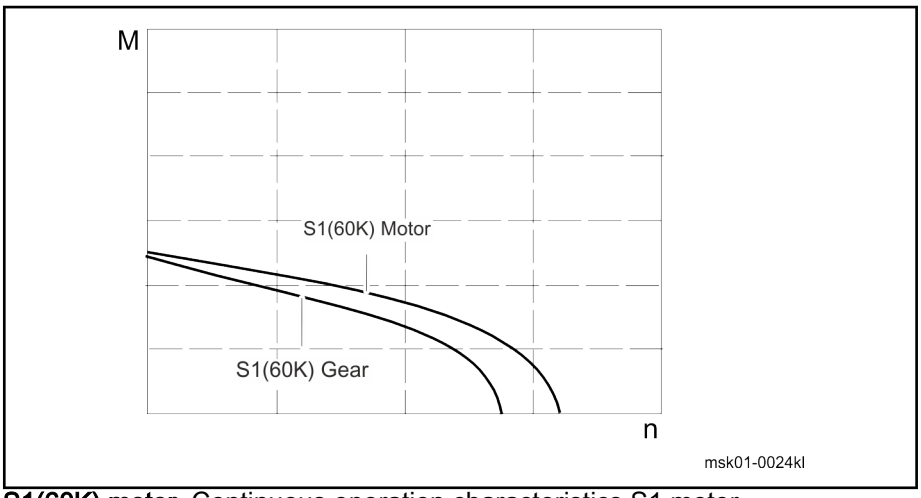

S1(60K) motor Continuous operation characteristics S1 motor
S1(60K) Gear Continous operation characteristics S1 motor for gearbox mounting

Fig. 9-12: S1 characteristic curve of gearboxes

☞ The indicated torques in the characteristic curves of the motor have to be reduced by **20-30%** when mounting gearboxes.

Please, heed all further notes and specifications within this documentation for the used gearboxes.

Overdetermined Bearing

Generally, overtermined bearings are to be avoided by all means when connecting drive elements. The tolerances inevitably present in such cases will

lead to additional forces acting on the bearing of the motor shaft and, as the case may be, to a distinctly reduced service life of the bearing.

☞ If overdefined attachment cannot be avoided, it is absolutely necessary that Bosch Rexroth be consulted.

Couplings

The machine construction and the drive elements used must be carefully adapted to the motor type so as to make sure that the load limits of the shaft and the bearing are not exceeded.

☞ When extremely stiff couplings are attached, the radial force which constantly changes the angular position may cause an impermissibly high load on the shaft and bearing.

Ball bearing pinion or helical drive pinion

Owing to thermal effects, the flange-sided end of the output shaft may shift by 0.6 mm in relation to the motor housing. If helical drive pinions or bevel gear pinions directly attached to the output shaft are used, this change in position will lead to

- a shift in the position of the axis, if the driving pinions are not defined axially on the machine side,
- a thermally dependent component of the axial force, if the driving pinions are defined axially on the machine side. This causes the risk of exceeding the maximum permissible axial force or of the play within the gears increasing to an impermissible degree.
- Damage of the motor bearing on the B-side due to exceeding of the maximum permissible axial force.

☞ In such cases, drive elements should preferably be used with their own bearings which are connected to the motor drive shaft via axially compensating couplings.

9.10 Holding Brakes

9.10.1 Holding Brake Electrically-Released

The holding brake of the IndraDyn S motors works according to the principle "electrically-released". The holding brakes release when the switching voltage is applied.

The voltage supply of the holding brake has to be designed so as to guarantee under the worst installation and operation conditions that a sufficient voltage **24 V ±10%** is available at the motor in order to release the holding brake.

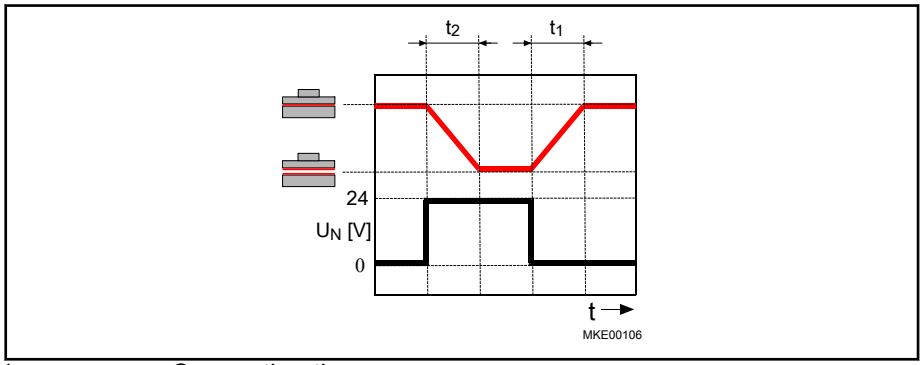

t_1 Connection time
t_2 Disconnection time

Fig. 9-13: Switching status of holding brake over time

The electrically releasing holding brake is used to hold the axes at a standstill and when the ”controller enable” signal is off. When the supply voltage fails and the controller is enabled, the electrically-releasing holding brake will close automatically.

☞ Do not use the holding brake as an operating brake for moving axes.

If the holding brake is repeatedly activated with the drive rotating or the allowed braking energy is exceeded, premature wear and tear may occur.

9.10.2 Holding Brakes - Notes Regarding Safety

Observe the safety requirements for the system planning and development.

⚠ DANGER **Personal injury through hazardous movements caused by falling or descending axes!**

Secure vertical axes against falling or descending after disconnection:

- lock the vertical axes mechanically,
- provide an external braking / collecting / clamping device, or
- Ensure sufficient weight compensation of the axes.

The serially delivered holding brakes which are driven by the control device are **not** suited for personal safety!

Personal protection must be realized by superordinate fail-safe measures, such as e.g. the locking off of the danger zone by means of a protective fence or grill.

Beside the specified details and notes about holding brakes, heed the additional standards and directives when planning the system.

For Europian countries:

- EN 954 and ISO 13849-1 and ISO 13849-2 Safety-related components of controls
- Information sheet no. 005 "Gravity-loaded axes (vertical axes)" published by: Fachausschuss Maschinenbau, Fertigungssysteme, Stahlbau

For the USA:

- See National Electric Code (NEC), National Electrical Manufacturers Association (NEMA) as well as local building regulations.

Comply with all applicable national regulations!

The permanent magnetic brake is no safety brake. This means, a torque reduction by non-influenceable disturbance factors can occur (see EN 954 and ISO 13849-1 and ISO 13849-2 or the information leaflet No. 005 about "Gravity-loaded axes (vertical axes)").

Please pay particular attention to the following:

- Corrosion on friction surfaces, as well as dust, perspiration and sediments reduce the braking effect.
- Grease must not hit the friction surface.
- Overvoltage and too high temperatures can durably weaken the permanent magnets and thus the brake.

The functionality of the holding brake is no longer ensured, if the air gap between armature and pole is increasing due to wear.

9.10.3 Layout of Holding Brakes

Holding brakes on motors are basically not designed for service braking. The effective braking torques are physically conditionally different in static and dynamic operation.

Normal operation and EMERGENCY STOP	**event of faults**
In **normal operation**, using the holding brake for clamping of a standstill axes, the ”statistic holding torque” (M4), applies as indicated in the data sheets. For **EMERGENCY STOP** to deactivate an axis ($n < 10\ min^{-1}$), a "dynamic braking moment" acts (M_{dyn}) - sliding friction.	For **fault conditions** to deactivate a moving axis ($n \geq 10\ min^{-1}$), a "dynamic braking moment" acts (M_{dyn}) - sliding friction.
$M4 > M_{dyn}$ Therefore, note the following description of dynamic sizing.	

Tab. 9-8: Dynamic Sizing

Dynamic Sizing

The load torque must be smaller than the minimum dynamic moment M_{dyn} which the holding brake can provide. Otherwise the dynamic holding brake torque is not sufficient to stop the axes.

If a mass is to be decelerated in a defined time or in a defined route, the additional mass moment of inertia of the whole system must be taken into account.

Project planning recommendation

To ensure construction safety, reduce the required holding torque to 60% of the static holding torque (M4) of the holding brake.

9.10.4 Holding Brake – Commissioning and Maintenance Instructions

In order to ensure proper functioning of the holding brake, it must be checked before the motors are commissioned. The test as well as the resurfacing may be carried out "mechanically by hand" **or** "automatically by means of the software function".

Checking and resurfacing of holding brakes by hand

Measure the holding torque (M4) of the holding brake. If necessary, resurface the holding brake.

Measuring the Holding Torque (M4) of the Holding Brake

1. De-energize the motor and secure it against re-energization.
2. Measure the transferable holding torque of the holding brake with a torque wrench. For holding torque (M4) refer to the technical data.

   If the holding torque (M4) is achieved, the motor is ready for assembly.
   If the holding torque (M4) **is not achieved**, the subsequent resurfacing-process can be used to reconstitute the holding torque.

Resurfacing the Holding Brake

1. At closed holding brake, turn the output shaft by hand, e.g. with the help of a torque wrench, by about 5 revolutions.
2. Measure the holding torque (M4).

   If the holding torque (M4) is achieved, the motor is ready for assembly.

If the specified holding torque (M4) is not attained after several grinding-in processes, the holding brake is not operable. Please, contact the Rexroth Service.

Checking and resurfacing of holding brakes by means of the software function

Checking the Holding Torque (M4) via P-0-0541, C2100 Command Holding system check

1. The efficiency of the holding brake and the opened state are checked by the control device by starting the routine "P-0-0541, C2100 Command Holding system check".

   If the holding brake is operational, the drive is in an operational state after the routine was run through. If the braking torque is too low, the control device outputs a corresponding message.

☞ The brake test can also be carried out cyclically in the framework of a preventive maintenance.

Restoring the Holding Torque (M4) by means of the Software Function

The following possibilities are available:

1. Realization of the resurfacing routine IndraDrive "Restoring the holding torque "(see"P-0-0544, C3900 Command Resurfacing of motor holding brake"). A repeated realization of the resurfacing routine is possible.

   Upon the execution of the command C3900 it is not checked whether the resurfacing of the holding brake was successful. It is recommended to execute the command C2100 (Command Holding system check) once again.

2. Resurfacing routine by superior control. Here, special control programs adapted to the machine and system concepts are required. If necessary, please contact your Bosch Rexroth distribution partner and discuss the resurfacing routine parameters for your application.

🕮 For further information on software functions, see Functional Description of firmware.

9.11 Acceptances and Approvals

9.11.1 CE Symbol

Declaration of conformity

Certificate of conformity certifying the structure of and the compliance with the valid EN standards and EC guidelines are available for all MSK motors. If necessary, these declarations of conformity can be requested from the responsible sales office.

The CE mark is applied to the motor type label of the MSK motors.



Fig. 9-14: CE mark

9.11.2 cURus-Sign

MSK motors are listed under **file number E335445** by the UL authorities (Underwriters Laboratories Inc.®). Approved motors are labeled with the following sign on the motor type plate. Actual information about UL approvals can be called up under http://www.ul.com/global/eng/pages/.

The cURus mark for approved motors is applied to the motor type label of the MSK motors.



Fig. 9-15: cURus sign

9.12 Motor Cooling

9.12.1 Natural Convection

Rexroth motors of the standard design are self-cooling motors. The heat dissipation is realized over the natural convection to the ambient air and heat conduction onto the machine construction.

☞ Pollution of the motors reduces the heat dissipation. Ensure tidiness!

9.12.2 Fan Units

Fan units are deliverable for certain motor types. The power data given in the technical data are labeled with the index "S" for "surface". You will find a description of the technical data of the available fan units in chapter 7.1 "Fan Units for MSK Motors" on page 179.

These motors are cooled via air currents which are guided across the surface of the motor by air baffles. The fan is designed such that it uses clean air from its environment to cool the motor.

It is explicitly prohibited to use the fan under the following conditions:

- Delivery of air which contains abrasive particles
- Delivery of air which has a strongly corroding effect, e.g., salt mist
- Delivery of air which contains a high dust load, e.g., extraction of saw dust
- Delivery of combustible gases/particles
- Using fan units as safety related part or for assumption of safety related funktions

To ensure that the fan unit can move the required air volume, a minimum distance for letting the air in and out must be kept between the fan grille and the machine. This distance is based on the motor construction.

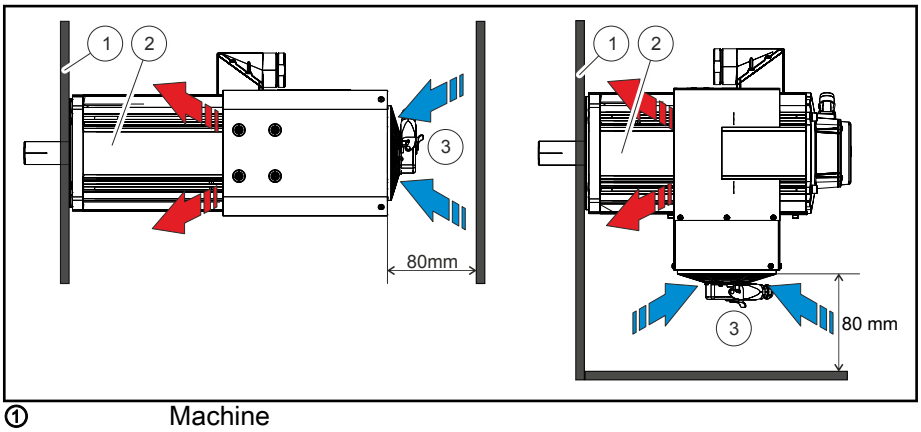

① Machine
② Air outlet space
③ Air inlet space

Fig. 9-16: Fan units, installation space, minimum distance

Provide for the minimum distance of the air supply ③ when designing the machine.

Dirt and contaminants can reduce the flow rate of the fans and result in a thermal overload of the motors. When the motors are operated in a dirty environment, the availability of the system is increased by cleaning the fans and motor cooling fins at regular intervals. When designing the machine, provide

for accessibility of the motor and fan for maintenance purposes. For special instructions on maintenance and troubleshooting of motor fans, please refer to chapter 13.4 "Maintenance" on page 261.

9.12.3 Liquid Cooling

Selection of Cooling System

The heat of the transformed motor power loss P_V is dissipated using the cooling water. Liquid cooled motors may only operated via an externally connected heat exchanger unit to ensure the necessary coolant inlet temperature.



Heat exchanger units are not in the scope of delivery of Bosch Rexroth and must be dimensioned and prepared by the customer. See also chapter "Manufacturers of heat exchanger units" on page 230.

Dimensioning

An effective power loss dissipation is precondition to reach the specified motor data. The height of the power loss in the motor is significantely defined by the utilization capacity of the motor. The motor performance depends from as good as or as fast as the power loss can be dissipated.

Therefore, dimension the performance of the heat exchanger unit or cooling system in such a way, that arising power loss of the motors can be removed at any time. This is valid for the total sum of each power loss, if several motors are operated on one cooling system, The necessary coolant pressure must be generated even at maximum volume current.



The necessary cooling and pump performance is calculated by the sum of the connection motors, the specified minimum flow and the pressure drop.

Please observe the project planning manual "Liquid Cooling of Rexroth Drive Components", MNR R911266417.

Cooling circuit

Generally, 2 different cooling circuits are used to cool the motors.

- closed cooling circuit (no penetration of oxygen possible)
- half-open cooling circuit (only through the pressure compensation container can oxygen penetrade into the cooling system)



Open cooling circuits with intensive oxygen contact are not allowed. Bosch Rexroth recommends to design the cooling circuits as closed system, to minimize the system-wide bacterial growth.

The occuring electro-chemical processes within the cooling system must be minimized via selection of the materials. Avoid mixed installations, e.g. combinations of different materials, like copper, brass, iron, zinc and halogenated plastics (e.g. tubes and sealings made of PVC)

Operating Conditions and Application Notes

Potential equalization of the cooling system

Connect all components within the cooling system (e.g. motor, heat exchanger, pipe system, pump, pressure compensation container, etc.) with a potential equalization. Do the potential equalization with a copper busbar or copper wire with an appropriate conductor cross-section.

Coolant ducts may never have contact with live parts. Observe an insulating spacing > 13 mm! All cables must be mechanically fixed and checked on their tightness in regular intervals.

Manufacturers of heat exchanger units

The following table shows several manufacturers of cooling aggregates. This list does not make a claim of being complete and is simply a small number of cooling aggregate manufacturers. Of course, other products of other manufacturers can be used.



The performance test for the used coolants and the design of the liquid coolant system are generally the responsibility of the machine manufacturer.

In general, Bosch Rexroth does not assume any guarantee for foreign products.

Rittal GmbH & Co. KG	http://www.rittal.com
KKT Kraus Kälte- und Klimatechnik GmbH	http://www.kkt-chillers.com
Glen Dimplex Deutschland GmbH	http://www.riedel-cooling.com
BKW Kälte-Wärme-Versorgungstechnik GmbH	http://www.bkw-kuema.de
Hyfra Industriekühlanlagen GmbH	http://www.hyfra.de

Tab. 9-9: Manufacturers of heat exchanger units

Coolants

The performance of the cooling system must be rated by the machine or coolant system manufacturer such that all requirements regarding flow, pressure, cleanliness, temperature gradient, etc. are maintained in every operating state.

The cooling medium must be provided by the customer. Water must be used as cooling medium. Water which is to be used as cooling water must comply with certain criteria and treated accordingly if necessary (see Fig. 9-10, Quality of the cooling water). Coolant additives must be admixed into the coolant for corrosion protection and chemical stabilization. The selected coolant additives must comply with the materials in the cooling system (e.g. copper, brass, stainless steel, etc.) and may not contain any environmentally hazardous substances.

A cooling with floating water from the supply network is not recommended. Normal water can be heavily calcified and cause sediments or corrosion within the cooling system. For any alues regarding composition of floating water, please refer to your local water supplier. Your manufacturer for coolant additives is on hand for further notes about necessary quality of the coolant water or additional water.

Should other coolant mediums than water be used, a performance reduction of the motor can be necessary to dissipate the created power loss within the cooling medium. In this case, please contact your Bosch Rexroth sales partner.

NOTICE **Impairment or failure of motor, machine or cooling system!**

- For this reason, liquid cooled motors may only be operated as long as coolant supply is ensured.
- Observe the manufacturer's instructions when designing and operating cooling aggregates.
- Do not use coolants or cutting materials from machining processes for cooling.
- If the coolants, additives or cooling lubricants used are too aggressive, the motors may be damaged to an irreparable degree.

Quality of the cooling water

Requirements on the cooling water, especially with regard to the material compatibility must be adjusted with the manufacturer of coolant aggregates and the manufacturer of the coolant additives. Basically, the minimum requirements on the cooling water are shown in the following.

	Cooling water quality for motors with internal cooling circuit made of ...		
	Copper/brass	Aluminum pressure casting / steel	Stainless steel
pH-value (at 20 °C)	6 ... 9		
Total hardness	1.2 ... 1.8 mmol/l		1.2 ... 2.5 mmol/l
Concentration of chloride	< 40 ppm		< 150 ppm
Concentration of sulfate	< 50 ppm		< 200 ppm
Concentration of nitrate	< 50 ppm		
Part of dissolved materials	< 350 ppm		
Particle size of contaminations	≤ 100 µm		
Conductivity	< 50 µS/cm	< 500 µS/cm	< 2000 µS/cm

Tab. 9-10: Quality of the cooling water

Cleaning the coolant circuit

Inspect and clean (purge) the cooling system at regular intervals as specified in the machine and cooling system manufacturer's maintenance schedule.

Note that the utilization of unsuitable cleaning agents may cause irreversible damage to the motor cooling system. This type of damages does not lie within the responsibility of Bosch Rexroth.

NOTICE **Risk of damage to the motor cooling system by unsuitable cleaning agents! Loss of warranty!**

- The only liquids or materials allowed to be used for cleaning and motor cooling are those which do not corrode the motor cooling system or do not react aggressively to the materials used in our motors.
- Observe the instructions of the manufacturers of the cleaning agent and the cooling system.

Coolant Additives

Manufacturers of coolant additives

The following table shows several manufacturers of cooling aggregates (Fig. 9-11, Manufacturers of chemical additives) Of course, other products of other manufacturers can be used.



The performance test for the used coolants and the design of the liquid coolant system are generally the responsibility of the machine manufacturer. The selected coolant additives must be compatible with the materials within the cooling system, to avoid e.g. electro-corrosion.

Observe the environmental protection and waste disposal instructions at the place of installation when selecting the coolant additives.

Nalco Deutschland GmbH	http://www.nalco.com
FUCHS PETROLUB AG	http://www.fuchs-oil.com
Clariant Produkte (Deutschland) GmbH	http://www.antifrogen.de
hebro chemie GmbH	http://www.hebro-chemie.de
TYFOROP Chemie GmbH	http://www.tyfo.de
Schweizer-Chemie GmbH	http://www.schweitzer-chemie.de

Tab. 9-11: Manufacturers of chemical additives

The proper chemical treatment is precondition to prevent corrosion, to maintain thermal transmission, and to minimize the growth of bacteria in all parts of the system.

In the following, the products of Nalco are exemplarily listed. Nalco makes different additives in form of "ready-to-use cooling water" and "water treatment kits" available, depending on the size of the cooling system.

The use of the following chemicals is designed for closed cooling systems and the following metallurgy.

- Stainless steel, aluminum, copper and non-ferrous metals

The packaging size and the ingredients of the water treatment kit are completely adapted to the corresponding system volume and the user may fill them into the coolant reservoir without observing further mixing ratios.

Ready-to-use cooling water (company NALCO)

System volume in liters	Ordering designation	Additives NALCO...
0,5 ... 50	Nalco CCL100.11R	CCL100

Tab. 9-12: Ready-to-use cooling water (company NALCO)

Cooling water NALCO CCL100

Nalco CCL100 is a ready-to-use, preserved cooling water for the use in closed cooling water systems. It is supplied directly to the closed systems and contains all reagents in the propter treatment concentration.

Nalco CCL100 contains a corrosion inhibitor protecting iron, copper, copper alloys and aluminum against corrosion. Nalco CCL100 is free of nitrite and minimizes the micro-biological growth.

Water treatment kits (company NALCO)

System volume in liters	Ordering designation	Additives NALCO...
50 ... 99	480-BR100-100.88	TRAC100 7330 73199
100 ... 199	480-BR100-200.88	
200 ... 349	480-BR100-350.88	
350 ... 500	480-BR100-500.88	

Tab. 9-13: Water treatment kits (company NALCO)

Coolant Additive NALCO TRAC100

Nalco TRAC100 is a liquid corrosion and film inhibitor for the use in closed cooling systems. Optionally with TRASAR technology: it monitors, shows and dosages the product automatically to its target concentration and continuously protects the system. NALCO TRAC100 is a complete inhibitor protection iron metal, copper alloys and aluminum against corrosion. NALCO TRAC100 is free of nitrite and minimizes the requirements for micro-biological control.

Coolant additive NALCO 7330

Nalco 7330 is a non-oxidizing broad band biocide and suiteable for application in closed cooling circuit systems.

Coolant additive NALCO 73199

Nalco 73199 is an organic corrosion inhibitor supporting a fast own protection layer and covering protection layer for non-ferrous metals.

The above additives are part of the preventive water treatment program by Nalco. It comprises not only the chemicals but also test methods, service and equipment. All these are made available to the user of the products.

For additional information and order placement, please contact Fa. Nalco.

Operating Parameters

Inlet Temperature

Observe the temperature range permitted and consider the existing ambient temperature when setting the coolant inlet temperature.

☞ The coolant inlet temperature must be set in a temperature range of +10 ... +40°C and may be only max. 5°C under the existing ambient temperature to avoid condensation.

	Example 1:	Example 2:
Permitted coolant inlet temperature range:	+10 … +40 °C	+10 … +40 °C
Ambient temperature:	+20 °C	+30 °C
Coolant inlet temperature to be set:	+15 … +40 °C	+25 … +40 °C

Operating pressure

The maximum coolant inlet pressure of **6 bar** is valid for all MSK motors. Limit the inlet pressure to 3 bar for motors up to manufacturing date 2010-01-01 **FD 10W01**.

Please note that additional screwed or branch connections in the cooling circuit can reduce the flow and supply pressure of the coolant. The pressure drop Δp_n of the liquid-cooled motors is specified in the technical data.

☞ Install systems in the cooling circuit for monitoring flow, pressure and temperature.

9.13 Motor Temperature Monitoring

9.13.1 General Information

The motor temperature is monitored by two systems that are operated independently of each other

- Temperature sensor
- Temperature model

and ensures thus the best protection of motors against irreversible damage by thermal overload.

9.13.2 Temperature Sensor

The monitoring of the motor temperature is ensured via the temperature sensor of the KTY84 type, which is built into the stator. The motor temperature measured is controlled via the following threshold values:

- Motor - warning temperature (140 °C)
- Motor - switch-off temperature (150 °C)

The threshold values are filed within the encoder memory of the MSK motors.

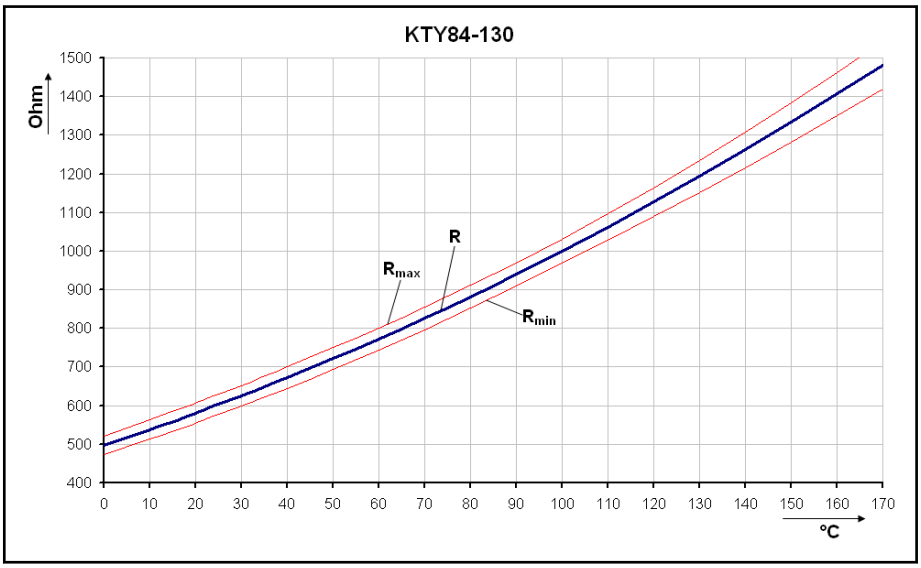

Fig. 9-17: Characteristic curve KTY84-130

The IndraDrive control devices monitor the functionality of the temperature sensors.

For further information, please refer to the functional description of IndraDrive control devices.

9.14 Operation on External Controllers

Rate of rise of voltage

The isolation system of the motor underlies a higher dielectric load in converter operation than in a sinusoidal source voltage only. The voltage stress of the winding isolation in converter operation is mainly defined by the following factors:

- Crest value of voltage
- Rise time of impulse on the motor terminal
- Switching frequency of converter output
- Length of power cable to the motor

Main components are the switching times of converter output and the length of the power cable to the motor. The occured rates of rise of voltage on the motor may not exceed the specified limits from **DIN VDE 0530-25 (VDE 0530-25):2009-08 (picture 14, limit curve A)** of impulse voltage, measured on the motor terminals of two strands in depencence of the rise time.



Outputs of IndraDrive converters keep this limits.

10 Transport and Storage

10.1 Transport Instructions

Transport our products only in their original package. Also observe specific ambient factors to protect the products from transport damage.

Based on EN 60721-3-2, the tables below specify classifications and limit values which are allowed for our products while they are transported by land, sea or air. Observe the detailed description of the classifications to take all of the factors which are specified in the particular class into account.

Allowed classes of ambient conditions during transport acc. to EN 60721-3-2

Classification type	Allowed class
Classification of climatic ambient conditions	2K2
Classification of biological ambient conditions	2B1
Classification of chemically active materials	2C2
Classification of mechanically active materials	2S2
Classification of mechanical ambient conditions	2M1

Tab. 10-1: Allowed classes of ambient conditions during transport

For the sake of clarity, a few essential environmental factors of the aforementioned classifications are presented below. Unless otherwise specified, the values given are the values of the particular class. However, Bosch Rexroth reserves the right to adjust these values at any time based on future experiences or changed ambient factors.

Allowed transport conditions

Environmental factor	Symbol	Unit	Value
Temperature	T_T	°C	-20 ... +80[1)]
Air humidity (relative air humidity, not combinable with quick temperature change)	φ	%	75 (at +30 °C)
Occurence of salt mist			Not permitted [1)]

1) Differs from EN 60721-3-2

Tab. 10-2: Allowed transport conditions



Before transport, empty the liquid coolant from the liquid-cooled motors to avoid frost damage.

Transport by air

If motor components with permanent magnets are shipped by air, the DGR (**D**angerous **G**oods **R**egulations) of the IATA (International Air Transport Association) for hazardous materials of class 9 which also include magnetized substances and objects must be observed. For example, these regulations are applicable for

- Secondary parts of synchronous linear motors
- Rotors of synchronous kit motors
- Rotors of synchronous housing motors (if shipped as motor components, i.e., separated from the stator or motor housing in case service work is required)

Transport and Storage

For information on the maximum allowed magnetic strenghts and methods of measuring such magnetic field strengths, please refer to the current IATA DGR (chapter 3.9.2.2).

10.2 Storage Instructions

10.2.1 Storage Conditions

Generally, Bosch Rexroth recommends to store all components until they are actually installed in the machine as follows:

- In their original package
- At a dry and dustfree location
- At room temperature
- Free from vibrations
- Protected against light or direct insolation

On delivery, protective sleeves and covers may be attached to our motors. They must remain on the motor for transport and storage. Do not remove these parts until shortly before assembly.

Based on EN 60721-3-1, the tables below specify classifications and limit values which are allowed for our products while they are stored. Observe the detailed description of the classifications to take all of the factors which are specified in the particular classification into account.

Allowed classes of ambient conditions during storage acc. to EN 60721-3-1

Classification type	Class
Classification of climatic ambient conditions	1K2
Classification of biological ambient conditions	1B1
Classification of chemically active materials	1C2
Classification of mechanically active materials	1S1
Classification of mechanical ambient conditions	1M2

Tab. 10-3: Allowed classes of ambient conditions during storage

For the sake of clarity, a few essential environmental factors of the aforementioned classifications are presented below. Unless otherwise specified, the values given are the values of the particular class. However, Bosch Rexroth reserves the right to adjust these values at any time based on future experiences or changed ambient factors.

Allowed classes of ambient conditions during storage acc. to EN 60721-3-1

Environmental factor	Symbol	Unit	Value
Air temperature	T_L	°C	-20 ... +60[1)]
Relative air humidity	φ	%	5 … 95
Absolute air humidity	ρw	g/m³	1 … 29
Condensation	- -	- -	Not allowed
Ice formation/freezing	- -	- -	Not allowed
Direct solar radiation	- -	- -	Not allowed [1)]
Occurence of salt mist	- -	- -	Not allowed [1)]

1) Differs from EN 60721-3-1

Tab. 10-4: Allowed storage conditions

☞ Before re-storage, empty the liquid coolant from the liquid-cooled motors to avoid frost damage.

10.2.2 Storage Times

Additional measures must be taken on commissioning to preserve proper functioning – irrespective of the storage time which may be longer than the warranty period of our products. However, this does not involve any additional warranty claims.

Motors

Bearing time / months			Measures for commissioning
> 1	> 12	> 60	
■	■	■	Visual inspection of all parts to be damage-free
■	■	■	Resurface the holding brake
	■	■	Check the electric contacts to verify that they are free from corrosion
	■	■	Let the motor run in without load for one hour at 800 ... 1000 rpm
	■	■	Measure insulation resistance. Dry the winding at a value of < 1kOhm per volt rated voltage.
		■	Exchange bearings
		■	Exchange encoders

Tab. 10-5: Measures before commissioning motors that have been stored over a prolonged period of time

Cables and Connectors

Bearing time / months			Measures for commissioning
> 1	> 12	> 60	
■	■	■	Visual inspection of all parts to be damage-free
	■	■	Check the electric contacts to verify that they are free from corrosion
		■	Visually inspect the cable jacket. Do not use the cable if you detect any abnormalities (squeezed or kinked spots, color deviations, ...).

Tab. 10-6: Measure before commissioning cables and connectors that have been stored over a prolonged period of time

11 Delivery Status, Identification, Handling

11.1 State of Delivery

11.1.1 General Information

On delivery, the IndraDyn S motors are packed in cardboard boxes or wooden crates. Packing units on pallets are secured by means of retaining straps.

⚠ CAUTION **Injuries due to uncontrolled movement of the retaining straps when cutting!**

Maintain a sufficient distance and carefully cut the bandages.

Motor shaft and plug connections are provided with protective sleeves at the factory. Remove these protective sleeves only immediately before starting assembly.

11.1.2 Inspection at the Factory

All IndraDyn S motors undergo the following tests, among others, at the factory:

Electrical test
- High voltage test
- Insulation resistance test
- Protective conductor connection
- Test of winding resistance

Mechanical test
- Concentricity and position tolerances of shaft end and fastening flange
- Axial eccentricity of the flange face to the shaft
- Coaxiality of the centering shoulder to the shaft
- Test of brake holding torque (option)

11.1.3 Test Realized by the Customer

Since all IndraDyn S motors undergo a standardized inspection procedure, high-voltage tests on the customer side are not required. Motors and components could be damaged if they undergo several high-voltage inspections.

NOTICE **Destruction of motor components due to improperly executed high-voltage inspection! Invalidation of warranty!**

Avoid repeated inspections.

Please observe the target values of the EN 60034-1.

11.2 Identification

11.2.1 Scope of Delivery

The total scope of a delivery is specified on the delivery or consignment note. However, the contents of a delivery can be distributed over several packages. Each individual package can be identified using the shipment label attached. Check if the delivered goods comply with the order and all freight papers, after receipt of delivery.

Complain any deviations immediately at your local Rexroth sales partner.

Complain visible transport damage directly at the carrier.

11.2.2 Rating Plate

Each motor has an individual type plate showing the device designation and providing technical information. A second type plate is delivered with the motor, additionally.

Use the second attached type plate and bring it cleary-visible on the machine, if the origin type plate on the motor is covert by a machine contour. This type plate is loose enclosed either to the motor or removably glued onto the original type plate.

The type plate is provided for

- Identification of the motor
- Procurement of spare parts in case of a fault
- Service information.



The type designation of the motor is also filed in the encoder data memory.

Motor name plate

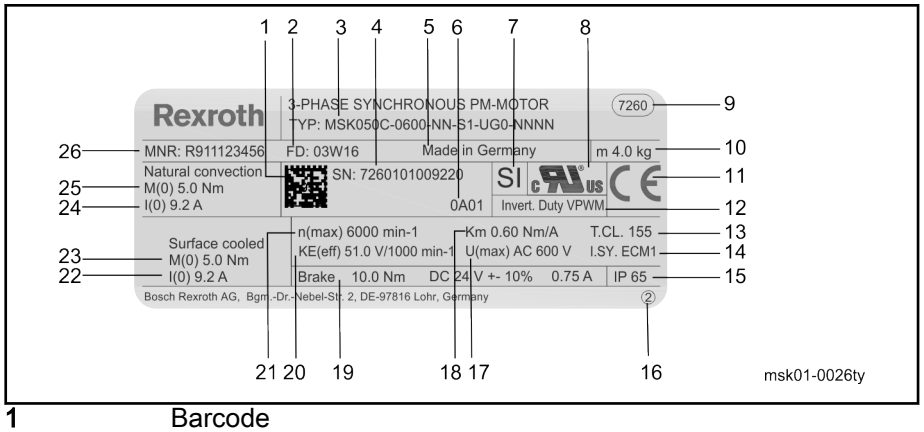

1	Barcode
2	Date of production
3	Motor type (ordering designation according to the type code)
4	Serial number
5	Country of origin
6	Revision state
7	Designation motor prepared for safety technique
8	Designation cURus (UL)
9	Factory number
10	Netto weight
11	CE conformity
12	Inverter Duty VPWM (UL)
13	Thermal temperature class
14	Designation isolation system (UL)
15	Degree of protection housing
16	Type plate designation
17	Voltage class (UL)
18	Torque constant at 20°C
19	Data about holding brake, optional (holding brake, rated voltage, rated current)
20	Voltage constant
21	Maximum velocity
22	Standstill current (surface or liquid)
23	Standstill torque (surface or liquid)
24	Continuous current at standstill 60K
25	Continuous torque at standstill 60K
26	Part number

Fig. 11-1: Type plate MSK

11.3 Handling

⚠ CAUTION **Injuries due to improper handling during transport of motors!**

Do only use suitable lifting devices (e.g. lifting sling belts, eyebolts, chain suspension ...).

Use protective equipment and personal protective clothing (gloves, safety shoes, ...).

Never walk under hanging loads.

NOTICE **Damage of property and invalidation of the warranty due to incorrect storage!**

Store the motors horizontally in their original packaging in a dust-free, dry, vibration-free and sun-protected environment.

Also observe the notes regarding storage and transport on the packaging.

Handling

On delivery, the IndraDyn S motors have protective caps and covers on the output shaft and on the flange sockets. During transport and storage, the protective sleeves must remain on the motor.

- Remove these protective sleeves only immediately before starting assembly.
- Also use the protective sleeves if you return the goods.
- Avoid any damage to the motor flange and drive shaft.

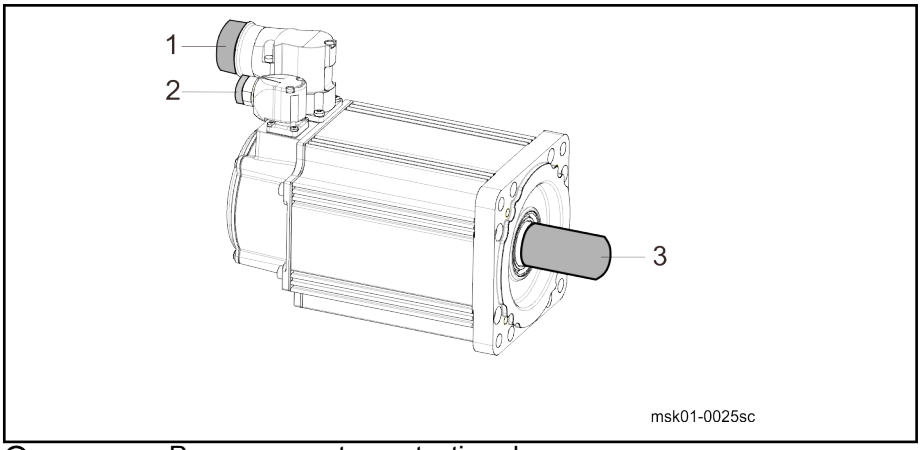

① Power connector protective sleeve
② Encoder connector protective sleeve
③ Shaft protective sleeve

Fig. 11-2: IndraDyn S protective sleeves

NOTICE **Motor damage due to beats onto the motor shaft**

Do never beat onto the shaft end and do not exceed the allowed axial and radial forces of the motor.

Transport

Please, observe the following points during transport:

- Use suitable means of transport and consider the weight of the components (you can find the weight information on the data sheets or on the type plate of the motor).
- Provide appropriate shock absorbers, if strong vibrations may occur during transport.
- Transport the motors only in the horizontal position.
- Use cranes with lifting sling belts to lift the motors.

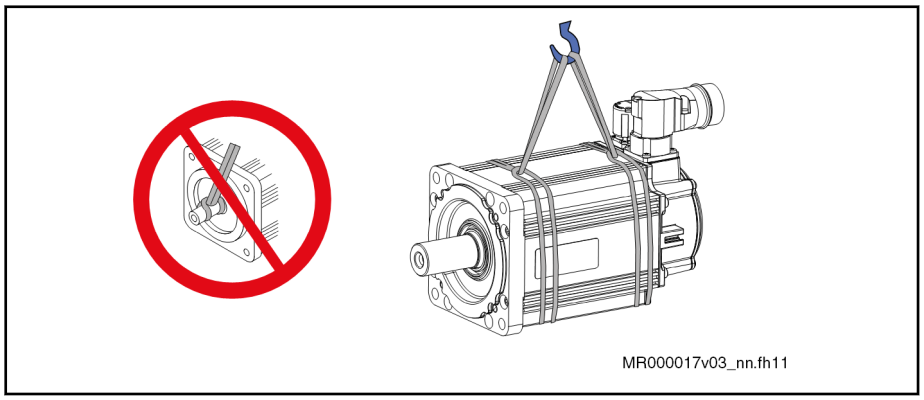

Fig. 11-3: Lifting and transporting motors by means of lifting sling belts

12 Installation

12.1 Safety

⚠ WARNING **Danger! Electric voltage! Operations in the vicinity of live parts are extremely dangerous.**

Work required on the electric system may only be carried out by skilled electricians. Tools for electricians (VDE tools) are absolutely necessary.



Prior to commencing work:

1. Isolate (even auxiliary circuits).
2. Protect the system or plant against restart.
3. Ensure de-energization.
4. Ground and short-circuit.
5. Cover or shield any adjacent live parts.

Before starting to work, check with an appropriate measuring device whether parts of the system are still under residual voltage (e.g. caused by capacitors, etc.). If yes, wait until these parts have discharged.

⚠ CAUTION **Injuries due to improper handling during transport of motors!**

Do only use suitable lifting devices (e.g. lifting sling belts, eyebolts, chain suspension ...).

Use protective equipment and personal protective clothing (gloves, safety shoes, ...).

Never walk under hanging loads.

Carry out all working steps with particular care This minimizes the risk of accidents and damage.

12.2 Skilled Personnel

Any works on the system and on the drives or in their vicinity must only be carried out by appropriately trained technical personnel.

Please make sure that all persons carrying out

- installation works
- maintenance, or
- operating activities

on the system are adequately familiar with the contents of this documentation as well as with all warnings and precautionary measures contained therein.

 Qualified technical personnel are those persons who have been trained, instructed or are authorized to activate and deactivate, ground and mark electric circuits and equipment according to the technical safety regulations. Qualified technical personnel must possess appropriate safety equipment and have been trained in first aid.

12.3 Mechanical Attachment

12.3.1 Flange Assembly

The screw connection must be adjusted to the installation situation (screw-length, property class, screw-in depth, material, ...). The dimensioning of the screw connection is in the responsibility of the customer.

To attach the motors properly and safely to the machine, Bosch Rexroth recommends the following screws and washers for attachment.

Mounting screws for IndraDyn motors

Hole ⌀ [mm]	Screw 8.8 DIN EN ISO 4762 DIN EN ISO 4014	Tightening torque M_A[Nm] at μ_K= 0.12	washer DIN EN ISO 28738
4.5	M4 × 20	3	-
6.6	M6 × 20	10.1	-
9	M8 × 20	24.6	Yes
11	M10 × 30	48	Yes
14	M12 × 40	84	Yes
18	M16 × 35	206	Yes

Tab. 12-1: Tightening torque of mounting screws

☞ The screwed connections must be able to take up both the force due to the weight of the motor and the forces acting during operation.

If the screws and washers used do not comply with this recommendation, the property class of the screws and the hardness class must be equivalent in order to transmit the required tightening torques.

IndraDyn S motors are designed for flange assembly (B05). Details on the mounting holes are given in the corresponding dimension sheet.

12.3.2 Foot Attachment

The foot attachment is only available for MSK133.

The screw connection must be adjusted to the installation situation (screw-length, property class, screw-in depth, material, ...). The dimensioning of the screw connection is in the responsibility of the customer.

Mounting screws for IndraDyn motors foot attachment

Motor	Hole ⌀ [mm]	Screw	Washer
MSK133-...-NPNN	12	M10	Yes

Tab. 12-2: Tightening torque of mounting screws

Foot assembly

Before attaching the IndraDyn A motors according to the foot assembly method, observe the clearance from the center of the motor shaft to the bottom edge of the foot specified in the particular motor dimension drawing. Compare this clearance with the connection clearance actually present on the machine.

The mounting holes and clearances correspond to the general tolerance according to ISO 2768-m.

Before attaching the motor to the machine, align the motor such that the center line of the motor shaft is flush with the center line of the connection shaft.

Also note the information on this mounting tpye provided in chapter 9.3 "Design and Installation Positions" on page 212.

If attaching the motors according to the foot assembly method, proceed as follows:

1. MSK133: Dismount the lower lateral air baffles to have free access to the mounting holes.
2. Align the motor such that the center line of the motor shaft is flush with the center line of the connection shaft of the machine. Support the motor on sheet steel strips when aligning it.
3. Firmly connect the motor to the machine (for tightening torques, see tab. 12-1 "Tightening torque of mounting screws " on page 249).
4. MSK133: Reattach the air baffles to the motor.

Frame size	Motor attachment type	Number of mounting holes	Roughness height of the screwing surface to the machine
133	Foot plates (2 pcs.)	4	Rz32

Tab. 12-3: Foot assembly

12.3.3 Preparation

Prepare motor assembly as follows:

1. Procure tools, supplies, measuring and test equipment.
2. Check all components for visible damage. Damaged components may not be mounted.
3. Ensure that dimensions and tolerances on the system side are suitable for motor attachment (for details, see the dimension sheet).
4. Inspect all components, mounting surfaces and threads to ensure they are clean.
5. Make sure that the assembly can be carried out in a dry and dust-free environment.
6. Make sure that the holder for the motor flange is deburred.
7. Remove the protective sleeve of the motor drive shaft and keep it for further use.
8. Only for motors with holding brake:

   Check whether the motor holding brake reaches the holding torque specified in the data sheet. Should the brake fail to reach the torque specified, first resurface the holding brake as described under chapter 9.10.4 "Holding Brake – Commissioning and Maintenance Instructions " on page 225.

12.3.4 Assembling the Motor

Assemble the motor and observe thereby:

1. Avoid pinching or jamming the centering collar on the motor side.
2. Avoid damage to the insertion fitting on the system side.

3. Connect the motor with the machine and observe the tightening torques.
4. Check whether the connection is firm and accurate before carrying out any further steps.

After having assembled the motor mechanically, prepare it for electrical connection.

12.4 Electrical Connection – Motor Assembly

12.4.1 General Information

It is recommended that you use ready-made Rexroth connection cables. These cables provide a number of advantages, such as UL/CSA authorization, extreme load capability and resistance as well as a design suitable for EMC.

⚠ WARNING **Danger! Electric voltage! Operations in the vicinity of live parts are extremely dangerous.**

Work required on the electric system may only be carried out by skilled electricians. Tools for electricians (VDE tools) are absolutely necessary.



Prior to commencing work:

1. Isolate (even auxiliary circuits).
2. Protect the system or plant against restart.
3. Ensure de-energization.
4. Ground and short-circuit.
5. Cover or shield any adjacent live parts.

Before starting to work, check with an appropriate measuring device whether parts of the system are still under residual voltage (e.g. caused by capacitors, etc.). If yes, wait until these parts have discharged.

⚠ WARNING **Damage to persons or property by disconnecting or connecting energized connectors!**

- Connect and disconnect connectors only when they are dry and de-energized.
- During operation of the system, all connectors must be fixed.

⚠ WARNING **Risk of short-circuit caused by liquid coolant, lubricant or pollution! Short-circuits of live lines may cause unpredictable dangerous situations or lead to damage to property.**

When installing or replacing drive components, provide open sides of power connectors with protective caps.

Do only open terminal boxes for connection purpose and close them immediately after the connection is done.

12.4.2 Attaching the Connectors

Power/Encoder Connectors

When fitting the encoder connector with a screwed end fitting, proceed as follows:

1. Place the power connector in the correct position onto the thread of the connection housing.
2. Tighten the union nut of the power connector manually. By leading the cable in further, the power connector can be steadily brought to its final position.
3. Completely tighten the union nut.

☞ Only completely tightened union nuts guarantee the indicated IP65 protection against water and activate the vibration protection.

Installation

12.4.3 Adjusting the Output Direction

The output direction of connected power and encoder cables can be adjusted for many MSK motors. The adjustable flange sockets can be turned through 240° compare chapter 8.4 "Connector, Rotatable" on page 202.

The motor flange socket can be turned if an appropriate connector has been attached. Owing to the leverage of the attached connector, the flange socket can be turned manually to the desired position.

1. Connect the connector with the flange socket.
2. Move the flange socket to the desired output direction by turning the plugged-in connector.

☞ Do not use any tools (e.g. pliers or screwdrivers) to turn the motor flange socket. Mechanical damage to the flange socket when using tools cannot be excluded.

The desired output direction is set.

☞ Whenever the flange socket is turned, the holding torque in the set position is reduced. Change the output direction maximum 5 times.

12.5 MSK133 with Terminal Box Type RLK1200, RLK1300

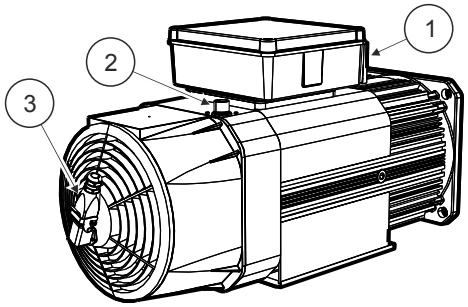

1 Power connection terminal boxes RLK1200 / RLK1300
2 Encoder connection RGS1001 connector
3 Fan connection connector (provided, connected by the customer)

Fig. 12-1: MSK133

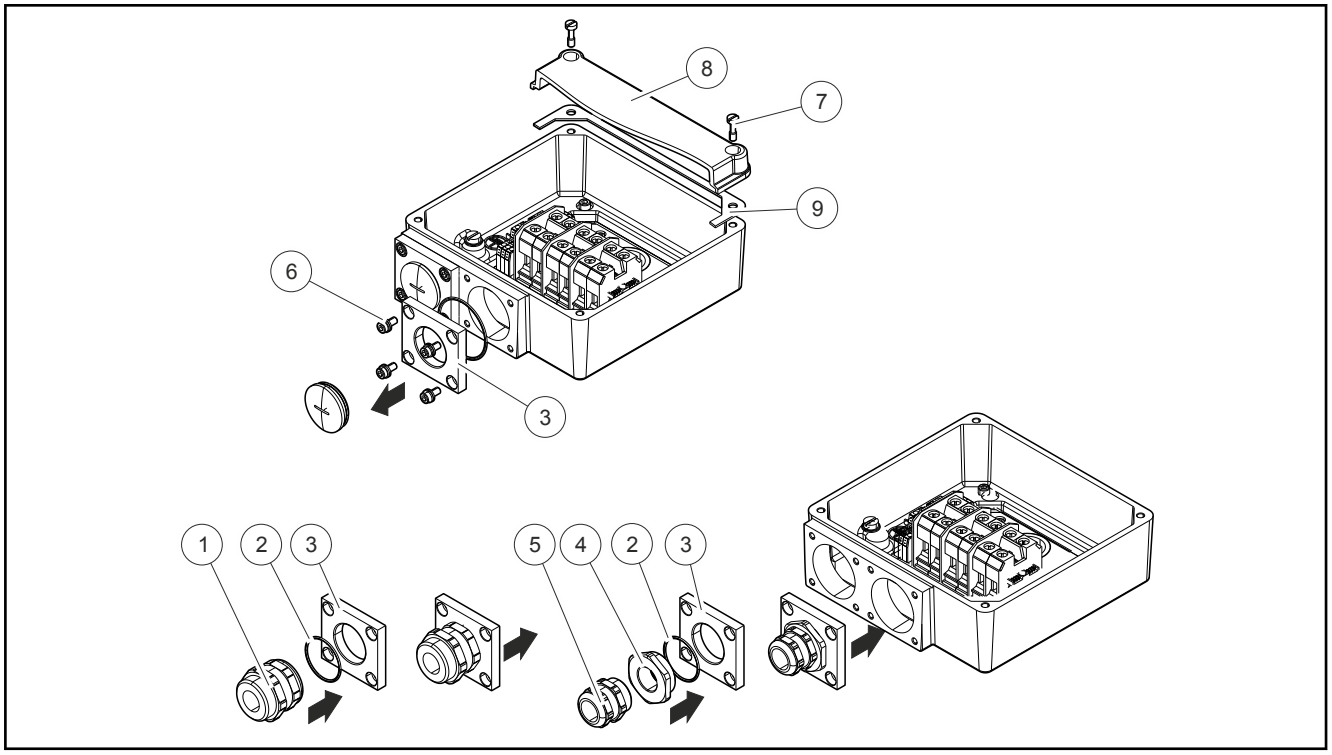

①⑤	Screwed connection
②	O-ring
③	Adapter plate to receptacle screwed connection, reduction and extension
④	Reduction (optional for cable cross sections 1.5 and 2.5 mm²), extension (optional for RLK1200 / 16 mm²)
⑥	Adapter plate mounting screws
⑦	Cover screws
⑧	Cover
⑧	Seal of terminal box cover

Fig. 12-2: Assembly RKL1200, RKL1300

Power connection is implemented with a single cable or two cables. The ready-made power cables are inserted via adapter plates and cable glands with optional reductions or extensions into the terminal box.

Power cable connection at terminal box

The following steps must be taken to connect the power cable to the terminal box:

1. Open the cover of the terminal box.

   Unscrew and remove the mounting screws (4 pcs.).
2. Remove the protection cover of cable gland.
3. Detach the adapter plate ③ from the terminal box.
4. Firmly secure the adapter plate to the metric cable gland on the power cable. Use a reduction piece for power wire cross-sections of 1.5 mm² and 2.5 mm².

   Before attaching the power cable to the adapter plate, check the O-ring for proper condition and correct position.
5. Place the power cable through the opening into the terminal box up to the adapter plate. Attach the adapter plate to the terminal box.

   Tightening torque of the screws ⑥: 9 Nm (±10%)

Installation

Before attaching the adapter plate ⑥ to the terminal box, check the O-ring ⑤ inserted in the adapter plate for proper condition and correct position.

6. Connect the wires according to the standard or double cabling connection diagram.

   Observe the following tightening torques:

Designation	Type	Connection mm²	Size / type	tightening torque Nm
Clamp power U1, V1, W1	WEF	1.5 … 16 (RLK1200) 1.5 … 35 (RLK1300)	M6	2.5
Clamp 1 ... 6 temperature sensor / holding brake (option)	WEF	0.2 … 2.5	Tension spring clamp	-
Ring terminal for PE and shield	RTE		M8	3.8
WEF = wire end ferrule RTE = ring terminal end				

Tab. 12-4: Tightening torque for screws in Nm within the terminal boxes

7. Close and attach the terminal box lid.

   Apply Loctite 243 (liquid screwlock) to the thread of the mounting screws for the lid ① and then attach the lid with all of the mounting screws.

   Screw tightening torque: 6.5 Nm (±10%)

   Before attaching the cover to the terminal box, check the glued-in seal ② on the terminal box cover for proper condition and correct position.

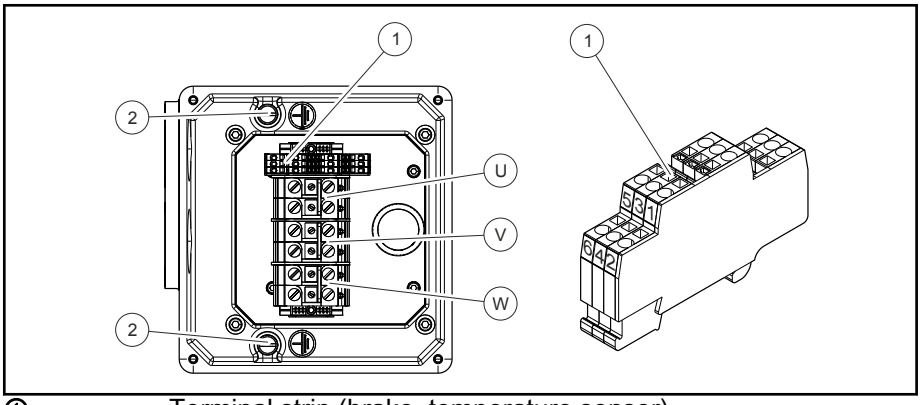

① Terminal strip (brake, temperature sensor)
② Ground terminal connection
ⓊⓋⓌ Power connection

Fig. 12-3: Junctions

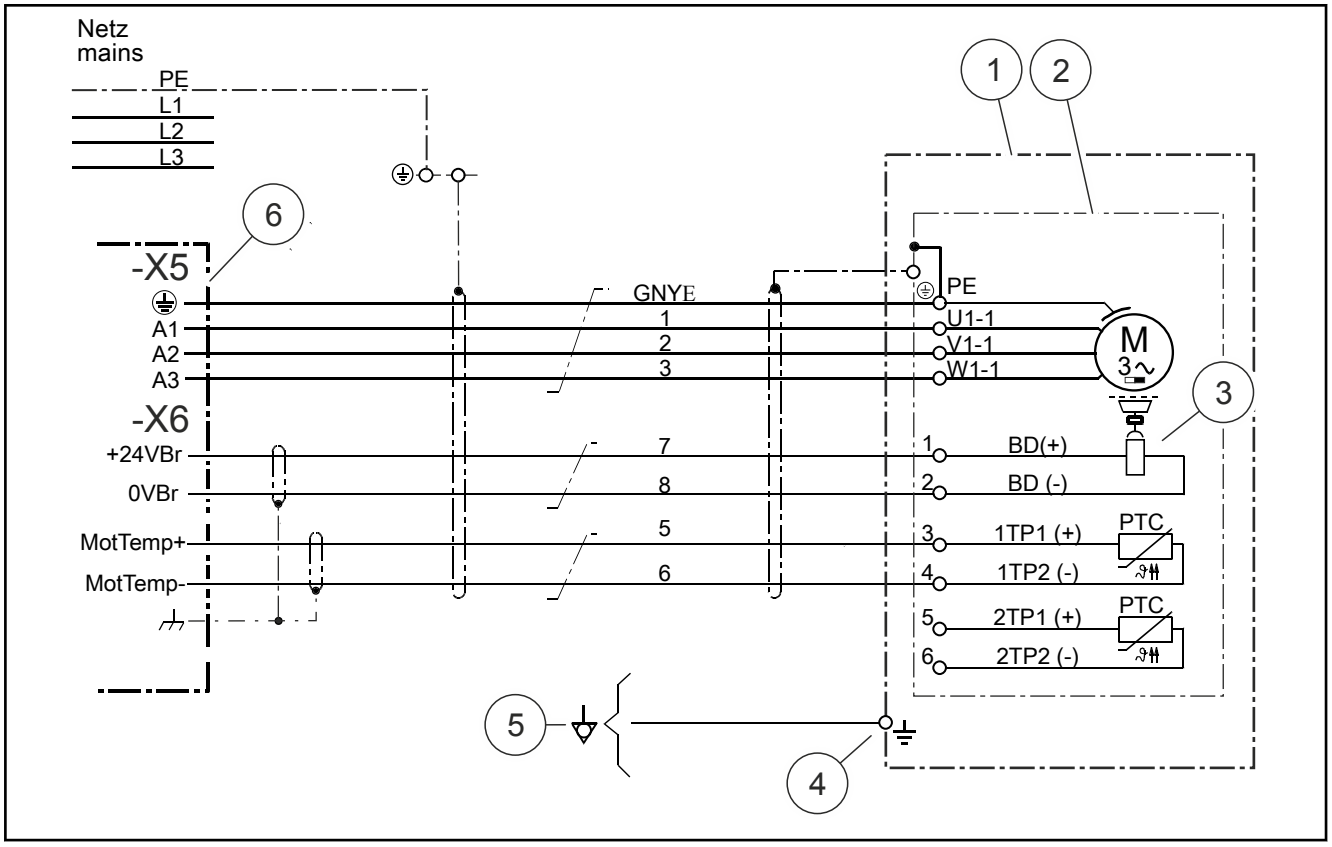

① Motor housing
② Terminal box
③ Holding Brake (Optional)
④ Equipotential bonding connection at the motor (only available on ATEX motors)
⑤ Equipotential bonding connection at the machine (necessary for ATEX motors)
⑥ Rexroth drive controller

Fig. 12-4: Connection scheme terminal box single cabling RLK1200, RKL1300

The following connection diagram shows a possible connection. The installation regulations applicable at the place of machine installation must be complied with.

13 Commissioning, Operation and Maintenance

13.1 Commissioning

⚠ CAUTION **Damage to property due to errors in the controls of motors and moving elements! Unclear operating states and product data!**

Do not perform a commissioning, if ...

- the connections, operating states or product data are unclear or faulty.
- the safety equipment and monitoring of the system is damaged or not in operation.

Never use any damaged products.

Contact Rexroth for missing information or support during commissioning.

The following notes on commissioning refer to IndraDyn S motors as part of a drive system with drive and control devices.

Preparation

1. Have the documentation of all products used ready at hand.
2. Check the products for damage.
3. Check all mechanical and electrical connections.
4. Activate the safety and monitoring equipment of the system.
5. Make sure that the optional holding brakes are ready for operation (cf. chapter 9.10.4 "Holding Brake – Commissioning and Maintenance Instructions " on page 225).

Procedure

When all requirements are met, proceed as follows:

1. Activate the optional motor cooling fan unit or liquid cooling.
2. Carry out the commissioning of the drive system according to the instructions provided in the respective documentation. You can find the respective information in the functional description of the drive control devices.

   Commissioning of drive controllers and the control unit may require additional steps. Commisioning of the motor does not include checks for proper functioning and performance of the plant. These checks must be carried out while the machine is commissioned as a whole. Observe the machine manufacturer's specifications and instructions.

Commissioning, Operation and Maintenance

13.2 Operation

Keep the described ambient conditions during operation (cf. chapter 9 "Operating Conditions and Application Notes" on page 209).

13.3 Deactivation

In case of malfunctions or maintenance measures, or to decelerate the motors, proceed as follows:

1. Observe the instructions in the machine documentation.
2. Use the machine-side control command to decelerate the drive to a controlled standstill.
3. Switch off the power and control voltage of the drive controller.
4. **Only for motors with blowers:** Switch off the motor protection switch for the motor blower.
5. Switch off the main switch of the machine.
6. Secure the machine against accidental movements and against unauthorized operation.
7. Wait for the discharge time of the electrical systems to expire and then disconnect all electrical connections.
8. Before dismounting the motor and, if applicable, the fan unit, secure them to ensure they cannot drop or move, and detach mechanical connections only thereafter.

13.4 Maintenance

13.4.1 General Information

Synchronous motors of the IndraDyn S series operate maintenance-free within the given operating conditions. However, operation under unfavorable conditions can lead to limitations in availability.

Increase availability with regular preventive maintenance measures. Observe the machine manufacturer's instructions in the machine maintenance plan and the maintenance measures described below.

⚠ WARNING **Danger! Electric voltage! Operations in the vicinity of live parts are extremely dangerous.**

Work required on the electric system may only be carried out by skilled electricians. Tools for electricians (VDE tools) are absolutely necessary.



Prior to commencing work:

1. Isolate (even auxiliary circuits).
2. Protect the system or plant against restart.
3. Ensure de-energization.
4. Ground and short-circuit.
5. Cover or shield any adjacent live parts.

Before starting to work, check with an appropriate measuring device whether parts of the system are still under residual voltage (e.g. caused by capacitors, etc.). If yes, wait until these parts have discharged.

⚠ CAUTION **Combustions via hot surface with temperatures over 100 °C**

Let the motor cool down, before maintenance. The thermal time constant stated in the technical data is a measure for the cooling time. A cooling time up to 140 minutes can be necessary!

Use safety gloves.

Do not work on hot surfaces.

⚠ WARNING **Damage to persons and property at maintenance during operation!**

Do not carry out any maintenance measures, while the machine is running.

During maintenance work, secure the system against restarting and unauthorized use.

13.4.2 Cleaning

Excessive dirt, dust or chips may adversely affect the functionality of the motors and, in extreme cases, even cause a failure of the motors. Clean the cooling fins of the motors at regular intervals (after one year at the latest) to reach a sufficiently high heat emission surface. If the cooling fins are partially covered with dirt, sufficient heat dissipation via the ambient air is no longer ensured.

An insufficient heat radiation may have undesired consequences. The bearing lifetime is reduced by operation at impermissibly high temperatures (the bearing grease is decomposing). Switch-off caused by overtemperature de-

spite operation on the basis of selected data, because the appropriate cooling is missing.

13.4.3 Bearings

The nominal lifetime of the bearings is L10h = 30,000 h according to DIN ISO 281, ed. 1990, provided the permissible radial and axial forces are not exceeded.

The motor bearings should be replaced if

- the nominal bearing service life has been reached,
- running noises occur.

☞ We recommend that bearings be replaced by the Bosch Rexroth Service.

13.4.4 Connecting Cables

⚠ DANGER **Death by electrocution possible due to live parts!**

If the slightest defect is detected in the cable sheath, the system must be shut down immediately. Then the cable must be replaced.

Do not repair any connection lines provisionally.

- Check connection cables for damage at regular intervals and replace them, if necessary.
- Check any optional energy management chains (drag chains) for defects.
- Check the protective conductor connection for proper state and tight seat at regular intervals and replace it, if necessary.

13.5 Notice at Malfunctions

⚠ WARNING **Electrocution by live parts of more than 50 V!**

Before working on live parts: De-energize the machine and secure the mains switch again unintendet or unauthorized re-energization.

Check if the voltage is dropped down under 50 V before touching live parts!

⚠ WARNING **Combustions via hot surface with temperatures over 100 °C**

Let the motor cool down, before maintenance. The thermal time constant stated in the technical data is a measure for the cooling time. A cooling time up to 140 minutes can be necessary!

Do not work on hot surfaces.

Use safety gloves.

In principle, heed the notice about malfunctions in the project planning manual and the commissioning manual. Contact the manufacturer if necessary chapter 16 "Service and support" on page 271.

Malfunction	Failure cause	Measures
The motor does not run	Drive enable is missing	Activate the drive enable
	Controller fault	Troubleshooting according to the documentation of the controller
	Supply voltage is missing	Check the supply voltage
	Brake is not released	Check the brake activation
Vibrations	Coupling elements or attachments are poorly balanced	Re-balance
	Adjustment of shaft end attachments (coupling, gearbox, ...) is insufficient	Re-align the attachments
	Mounting screws are loose	Lock the screw connections as specified
Running noise	Foreign bodies within the motor	Stop operation of the motor -> repair by manufacturer
	Bearing is damaged	Stop operation of the motor -> repair by manufacturer
High motor temperature Motor temperature monitoring unit responds	Operation outside of characteristic data	Reduce the weight
	Heat dissipation is impaired	Clean the motor Clean the grille of the fan unit and check the function of the fan Check the coolant circuit of liquid cooling systems
Wrong or incorrect temperature displayed	Temperature sensor not connected	Connect the temperature sensor
	Temperature sensor is defective	Stop operation of the motor -> repair by manufacturer

Tab. 13-1: Malfunctions at MSK motors

13.6 Dismantling

⚠ WARNING **Damage to persons and property at installation work!**

- Do not work on unsecured and operating machines.
- Before working, secure the machine against accidental movements and against unauthorized operation.
- Before dismantling, secure the motor and power supply against falling or movements before disconnecting the mechanical connections.

⚠ CAUTION **Combustions via hot surface with temperatures over 100 °C**

Let the motor cool down, before maintenance. The thermal time constant stated in the technical data is a measure for the cooling time. A cooling time up to 140 minutes can be necessary!

Use safety gloves.

Do not work on hot surfaces.

- Observe the instructions in the machine documentation.
- Observe the safety instructions.
- Dismount the motor from the machine. Store the motor properly!

14 Environmental protection and disposal

14.1 Environmental protection

Production processes

The products are made with energy- and resource-optimized production processes which allow re-using and recycling the resulting waste. We regularly try to replace pollutant-loaded raw materials and supplies by more environment-friendly alternatives.

No release of hazardous substances

Our products do not contain any hazardous substances which may be released in the case of appropriate use. Normally, our products will not have any negativ influences on the environment.

Significant components

Basically, our products contain the following components:

Electronic devices
- steel
- aluminum
- copper
- synthetic materials
- electronic components and modules

Motors
- steel
- aluminum
- copper
- brass
- magnetic materials
- electronic components and modules

14.2 Disposal

Return of products

Our products can be returned to our premises free of charge for disposal. It is a precondition, however, that the products are free of oil, grease or other dirt.

Furthermore, the products returned for disposal must not contain any undue foreign material or foreign components.

Send the products ”free domicile” to the following address:

Bosch Rexroth AG
Electric Drives and Controls
Buergermeister-Dr.-Nebel-Strasse 2
97816 Lohr am Main, Germany

Packaging

The packaging materials consist of cardboard, wood and polystyrene. These materials can be recycled anywhere without any problem.

For ecological reasons, please refrain from returning the empty packages to us.

Batteries and accumulators

Batteries and accumulators can be labeled with this symbol.



The symbol indicating "separate collection" for all batteries and accumulators is the crossed-out wheeled bin.

The end user within the EU is legally obligated to return used batteries. Outside the validity of the EU Directive 2006/66/EC keep the stipulated directives.

Used batteries can contain hazardous substances, which can harm the environment or the people´s health when they are improper stored or disposed of.

After use, the batteries or accumulators contained in Rexroth products have to be properly disposed of according to the country-specific collection.

Recycling

Most of the products can be recycled due to their high content of metal. In order to recycle the metal in the best possible way, the products must be disassembled into individual modules.

Environmental protection and disposal

Metals contained in electric and electronic modules can also be recycled by means of special separation processes.

Products made of plastics can contain flame retardants. These plastic parts are labeled according to EN ISO 1043. They have to be recycled separately or disposed of according to the valid legal requirements.

15 Appendix

15.1 List of Standards

Document number	Title	Edition
06/42/EG * 06/42/CE * 06/42/EC	Directive 2006/42/EG of the European Parliament and the Council of Europe of 17th May 2006 regarding machines and directive 95/16/EG (new version)	17.05.2006
04/108/EG * 04/108/CE * 04/108/EC	Directive 2004/108/EG of the European Parliament and the Council of Europe of 15th December 2004 about approximation of the legislation of the member states about electromagnetic compatibility and repeal of the directive 89/336/EWG	15.12.2004
06/95/EG * 06/95/CE * 06/95/EC	Directive 2006/95/EG of the European Parliament and the Council of Europe of 12th December 2006 about approximation of the legislation of the member states about electrical apparatus for use within certain voltage limits.	12.12.2006
DIN 332-2	Center holes 60° with thread for shaft ends for rotating electrical machines	1983-05
DIN 748-1	Zylindric shaft end, dimensions, rated torque	1970-01
DIN 6885-1	Drive Type Fastenings without Taper Action; Keys, Keyways, Deep Pattern	1968-08
DIN 42955	Tolerances of shaft extension run-out and of mounting flanges for rotating electrical machinery, test	1981-12
DIN EN 60034-1 Amendment 1 * VDE 0530-1 Amendment 1	Rotating electrical machines - Part 1: Rating and performance (IEC 60034-1:2004); German version EN 60034-1:2004, amendment to DIN EN 60034-1 (VDE 0530-1):2005-04	2007-09
DIN EN 60034-7; VDE 0530-7	Rotating electrical machines - Part 7: Classification for construction, setup elevation and position of terminal boxes (IM-Code) (IEC 60034-7:1992 + A1:2000); German version EN 60034-7:1993 + A1:2001	2001-12
DIN EN 60034-9 Amendment 1 * VDE 0530-9 Amendment 1	Rotating electrical machines - Part 9: Noise limit values (IEC 60034-9:2003, modified + A1:2007); German version EN 60034-9:2005 + A1:2007, amendment to DIN EN 60034-9 (VDE 0530-9):2008-01	2008-04
DIN EN 60034-11; VDE 0530-11	Rotating electrical machines - Part 11: Thermal protection (IEC 60034-11:2004); German version EN 60034-11:2004	2005-04
DIN EN 60034-14; VDE 0530-14	Rotating electrical machines - Part 14: Mechanical vibration of certain machines with an axis height of 56 mm and higher; measurement, evaluation and limits of vibration (IEC 60034-14:2003 + A1:2007); German version EN 60034-14:2004 + A1:2007	2008-03
DIN EN 60204-1 Amendment 1 * VDE 0113-1 Amendment 1	Safety of machinery - Electrical equipment of machines - Part 1: General requirements (IEC 60204-1:2005, modified); German version EN 60204-1:2006, amendment to DIN EN 60204-1 (VDE 0113-1):2007-06; German version CENELEC-Cor. :2010 to EN 60204-1:2006	2010-05
DIN EN 60529 * VDE 0470-1	Protection class by housing (IP-Code) (IEC 60529:1989 + A1:1999); German version EN 60529:1991 + A1:2000	2000-09
DIN EN 60721-1	Classification of environmental conditions - Part 1: Environmental parameters and their severities (IEC 60721-1:1990 + A1:1992 + A2:1995); German version EN 60721-1:1995 + A2:1995	1997-02
DIN EN 60721-3-3	Classification of environmental conditions - Part 3: Classification of groups of environmental parameters and their severities; section 3: Stationary use at weather-protected locations (IEC 60721-3-3:1994); German version EN 60721-3-3:1995	1995-09
DIN ISO 281	Rolling bearings; dynamic load ratings and rating life (ISO 281:2007)	2010-10
DIN VDE 0298-4; VDE 0298-4	Application of cables and cords in power installations - Part 4: Recommended current-carrying capacity for sheathed and non-sheathed cables for fixed wirings in buildings and for flexible calbes and cords	2003-08

Tab. 15-1: List of standards

Appendix

15.2 Declaration of Conformity

Electric Drives and Controls | Hydraulics | Linear Motion and Assembly Technologies | Pneumatics | Service

Rexroth
Bosch Group

Konformitätserklärung

(Übersetzung des Originals der Konformitätserklärung)

- ☐ nach Maschinenrichtlinie 2006/42/EG
- ☒ nach Niederspannungsrichtlinie 2006/95/EG
- ☐ nach EMV-Richtlinie 2004/108/EG
- ☐ nach Druckgeräte-Richtlinie 97/23/EG
- ☐ nach ATEX-Richtlinie 94/9/EG

Dok.-Nr.: **TC30318-1**
Datum: **2012-02-01**

Hiermit erklärt der Hersteller,

Bosch Rexroth Electric Drives and Controls GmbH
Bürgermeister-Dr.-Nebel-Straße 2
97816 Lohr a. Main / Germany

dass das nachstehende Produkt

Bezeichnung:	AC-Motor
Typ:	MSK030, MSK040, MSK043, MSK050, MSK060, MSK061, MSK070, MSK071, MSK075, MSK076, MSK100, MSK101, MSK103, MSK131, MSK133
Ab Herstelldatum:	2009-01-08

in Übereinstimmung mit der oben genannten EU-Richtlinie entwickelt, konstruiert und gefertigt wurde.

Angewandte harmonisierte Normen:

Norm	Titel	Ausgabe
EN 60034-1	Drehende elektrische Maschinen – Teil 1: Bemessung und Betriebsverhalten	2010+ Cor.:2010
EN 60034-5	Drehende elektrische Maschinen – Teil 5: Schutzarten aufgrund der Gesamtkonstruktion von drehenden elektrischen Maschinen (IP-Code) – Einteilung	2001 + A1:2007

Weitere Erläuterungen:

Dieses Produkt ist eine Einbaukomponente, die aufgrund ihrer Einbaueigenschaften nicht vorneherein den Vorschriften für Endgeräte, Maschinen oder Anlagen entsprechen kann. Es darf daher nur zu Einbauzwecken verwendet werden.
Die Bewertung der elektrischen und mechanischen Sicherheit, der Umwelteinflüsse (Fremdkörper, Feuchtigkeit) muss im eingebauten Zustand am Endprodukt erfolgen.
Im eingebauten Zustand können sich die EMV-Eigenschaften dieses Produktes ändern.
Deshalb ist für das Endprodukt (Endgerät, Maschine, Anlagen) eine Überprüfung der EMV-Eigenschaften durch den Endproduktthersteller zweckmäßig.

Ort/Datum/Unterschrift wie im Original der Konformitätserklärung angegeben)

Änderungen im Inhalt der Konformitätserklärung sind vorbehalten. Derzeit gültige Ausgabe auf Anfrage.

Seite 1 / 1

Fig. 15-1: Conformity

Appendix

Electric Drives and Controls | Hydraulics | Linear Motion and Assembly Technologies | Pneumatics | Service

Rexroth
Bosch Group

Declaration of Conformity

(Translation of the original Declaration of Conformity)

Doc. No.: **TC30318-1**

Date: **2012-02-01**

- ☐ in accordance with Machinery Directive 2006/42/EC
- ☒ in accordance with Low Voltage Directive 2006/95/EC
- ☐ in accordance with EMC Directive 2004/108/EC
- ☐ in accordance with Pressure Equipment Directive 97/23/EC
- ☐ in accordance with ATEX Directive 94/9/EC

The manufacturer

Bosch Rexroth Electric Drives and Controls GmbH
Bürgermeister-Dr.-Nebel-Straße 2
97816 Lohr a. Main / Germany

hereby declares that the product below

Name:	AC motor
Type:	MSK030, MSK040, MSK043, MSK050, MSK060, MSK061, MSK070, MSK071, MSK075, MSK076, MSK100, MSK101, MSK103, MSK131, MSK133

From date of manufacture: 2009-01-08

was developed, designed and manufactured in compliance with the above-mentioned EU directive.

Harmonized Standards applied:

Standard	Title	Edition
EN 60034-1	Rotating electrical machines – Part 1: Rating and performance	2010+ Cor.:2010
EN 60034-5	Rotating electrical machines – Part 5: Degrees of protection provided by integral design of rotating electrical machines (IP code) - Classification	2001 + A1:2007

Further explanations:

This product is a built-in unit which, owing to its installation characteristics, is not able to comply with the regulations for complete apparatus, machines or installations from the outset. For this reason, it may only be used for built-in purposes. The product may only be assessed with regard to its electrical and mechanical safety as well as to environmental effects (foreign bodies, moisture) after it has been installed in the product intended for the final user.
After the product has been installed, its EMC properties may change. Hence the product intended for the final user (complete apparatus, machines or installations) should be inspected with regard to its EMC properties by the manufacturer of the product intended for the final user.

Place/date/signature as indicated in the original declaration.

We reserve the right to make changes to the content of the Declaration of Conformity. Current issue on request.

Page 1 / 1

Fig. 15-2: Declaration of conformity (copy/translation)

16 Service and support

Our worldwide service network provides an optimized and efficient support. Our experts offer you advice and assistance should you have any queries. You can contact us **24/7**.

Service Germany

Our technology-oriented Competence Center in Lohr, Germany, is responsible for all your service-related queries for electric drive and controls.

Contact the **Service Helpdesk & Hotline** under:

Phone:	**+49 9352 40 5060**
Fax:	**+49 9352 18 4941**
E-mail:	service.svc@boschrexroth.de
Internet:	http://www.boschrexroth.com

Additional information on service, repair (e.g. delivery addresses) and training can be found on our internet sites.

Service worldwide

Outside Germany, please contact your local service office first. For hotline numbers, refer to the sales office addresses on the internet.

Preparing information

To be able to help you more quickly and efficiently, please have the following information ready:

- Detailed description of malfunction and circumstances resulting in the malfunction
- Type plate name of the affected products, in particular type codes and serial numbers
- Your contact data (phone and fax number as well as your email address)

Index

A
Accumulators ... 265
Alignment ... 121
Ambient temperature ... 209
Ambient temperature in operation ... 22
Attachments ... 222
Available motor variants ... 159
Axial load ... 216

B
Balancing ... 121, 215
Ball bearing pinion ... 223
Batteries ... 265
Bearing
  Wear ... 221
Bearing failure ... 221
Bearing lifetime ... 221
Bearing load ... 216
Braking energy ... 224

C
CE symbol ... 227
Centering hole ... 121
Cleaning ... 228
Climatic conditions ... 209
Compatibility ... 213
Concentricity ... 121
Conditions of installation ... 212
Connection cables ... 262
Connection plan ... 198
Connection scheme terminal box single cabling ... 257
Connection technique
  Inner diameter ... 207
  Operating pressure ... 233
Connection technique MSK133 (terminal boxes) ... 254
Connection time ... 22
Contained substances
  see "Significant components" ... 265
Continuous current at standstill ... 21, 22
Continuous torque at standstill ... 21
Coolant
  Corrosion protection ... 230
Coolant additives
  Ready-to-use cooling water ... 232
  Water treatment kits ... 233
Coolant connection ... 207
Cooling fins ... 261
Coupling ... 223
Couplings ... 222

D
Degree of protection ... 212
Degree of protection acc. to EN 60529 ... 22
Design ... 212
Dimensions
  MSK133 (liquid cooling) ... 157
Discharge capacity ... 22
Disconnection time ... 22
Disposal ... 265
Drag chains ... 262
Drive system ... 11

E
Electric drive system ... 11
Energy management chains ... 262
Environmental protection ... 265

F
Fan
  Minimum distance ... 228
Flange ... 121
Flange assembly ... 249
Foot attachment ... 249
Foreign materials ... 213
Frame length ... 159
Frame size ... 159

G
Gear pinion ... 222
Gearboxes
  GTE ... 192
  GTM ... 192
Getriebe ... 222

H
Hazardous substances ... 265
Heat dissipation ... 261
Helical teeth ... 223
Holding brake ... 160
  Commissioning ... 225
  electrically-released ... 223
Holding brakes ... 223
  Danger warning ... 224
Holding torque ... 22
Housing varnish ... 121
Humidity
  Absolute air humidity ... 209
  Relative air humidity ... 209

I
Identification ... 242
Inappropriate use
  Consequences, exclusion of liability ... 9
Installation positions ... 212
Insulation class according to DIN EN 60034-1 ... 22
Intended use ... 9
IP degree of protection ... 212

Index

K
Key ... 214

L
Liquid cooling
Connection ... 207

M
Machine accuracy ... 21
Maximum current ... 22
Maximum speed ... 22
Maximum torque ... 22
Mean speed ... 217
Moment of inertia of the brake ... 22
Moment of inertia of the rotor ... 22
Motor assembly ... 249, 250
Motor attachment ... 249
Motor cooling
Coolant temperature ... 233
Coolants ... 230
Motor frame size ... 121
Motor name plate ... 243
Motor paint
Additional paint ... 214
Mounting screws ... 249
MSK030B ... 27
MSK030C ... 29
MSK040B ... 30
MSK040C ... 32
MSK043C ... 34
MSK050B ... 36
MSK050C ... 39
MSK060B ... 41
MSK060C ... 43
MSK061B ... 45
MSK061C ... 47
MSK070C ... 50
MSK070D ... 53
MSK071C ... 59
MSK071D ... 62
MSK071E ... 65
MSK076C ... 77
MSK100A ... 79
MSK100B ... 82
MSK100C ... 85
MSK100D ... 88
MSK101C ... 91
MSK101D ... 94
MSK101E ... 97
MSK103 ... 100, 102, 103
MSK131B ... 104
MSK131D ... 106
MSK133-SA ... 108
MSK133C ... 111
MSK133D ... 114
MSK133E ... 117

N
Non-intended use ... 10
Number of pole pairs ... 22

O
Operating hours ... 221
Output shaft ... 121, 214, 215
Key balancing ... 160
Plain output shaft ... 214
Overdetermined bearing ... 222

P
Packaging ... 265
PELV ... 15
Power loss
Power loss dissipation ... 229
Utilization capacity ... 229
Processing cycle ... 217
Product ... 159
Production processes ... 265
Protective extra-low voltage ... 15

R
Radial forces ... 213
Radial load ... 216
Radial shaft sealing ring ... 21
radial shaft sealing rings ... 215
Rated current ... 22
Rated voltage ... 22
Recycling ... 265
Return of products ... 265
Run-out ... 121
Running noises ... 262

S
Safety Notes for Electric Drives and Controls ... 11
Sealing air ... 193
Setup elevation ... 209
Shaft ... 160
plain ... 214
with keyway ... 214
Shaft end ... 121
Shaft load ... 216
Shaft sealing ring ... 215
Shock ... 211
Shock absorber ... 245
Significant components ... 265
sine-wave oscillations ... 210
Sling belts ... 245
Sound pressure level ... 22
Standards ... 8
state of the art ... 9
Storage time ... 240
Strength ... 251
Support
See service hotline ... 271
Switch-off temperature ... 234

T

Temperature increase on the housing - 60 K..... 21
Temperature increase on the winding - 100 K.... 21
Temperature sensor..... 234
Thermal time constant..... 22
Tightness..... 216
Torque constant at 20°C..... 22
Turning torque..... 203

U

UL authorization..... 227
Use
    Inappropriate use..... 10
    Intended use..... 9

V

Vibration..... 210
Vibration severity grade (quality of vibration).... 121
Voltage constant..... 22

W

Warning temperature..... 234
Weight..... 22
Winding..... 159
Winding inductivity..... 22
Winding resistance at 20 °C..... 22

Notes

Notes

Rexroth
Bosch Group

Bosch Rexroth AG
Electric Drives and Controls
P.O. Box 13 57
97803 Lohr, Germany
Bgm.-Dr.-Nebel-Str. 2
97816 Lohr, Germany
Tel. +49 9352 18 0
Fax +49 9352 18 8400
www.boschrexroth.com/electrics

R911296289

DOK-MOTOR*-MSK********-PR10-EN-P