Rexroth
Bosch Group

2-way cartridge valves; pressure functions

RA 21 050/02.03
Replaces: 06.98

Models LC and LFA

H/A/D 5593

Nominal sizes 16 to 100
Series 6X; 7X
Maximum operating pressure 420 bar (6092 PSI)
Maximum flow 7000 L/min (1850 GPM)

Table of contents

Contents	Page
Function, section, symbols	
– General	2
– Pressure relief function	2
– Pressure reducing function	2, 3
– Pressure sequencing function	3
– Cavity and porting pattern	4
Pressure relief function:	
– Cartridge valve type LC . DB…:	
• Ordering details	5
• Symbols	5
• Technical data	5
• Characteristic curves	6 – 11
• Seal kits	12
• Compression springs	12
• Preferred types	12
– Control cover type LFA . DB…:	
• Ordering details (general)	13 – 14
• Technical data	14
• Pilot valves	15
• Symbols (basic symbols)	16
• R-rings for pilot oil connections	17
• Seal kits	17
• Fixing screws	17
• Orifice dimensions	17

Contents	Page
Ordering details, symbols and unit dimensions:	
– Type DB	18 – 20
– Types DBW; DBS	21 – 25
– Type DBWD	26 – 28
– Type DBU2	29 – 32
– Type DBU3D	33 – 37
– Type DBE	38
– Type DBEM	39 – 42
Pressure reducing function:	
– Cartridge valve type LC . DR…:	
• Ordering details	43
• Symbol	43
• Technical data	43
• Characteristic curves	44 – 46
• Seal kits	47
• Compression springs	47
– Control cover type LFA . DR…:	
• Ordering details (general)	48
• Symbol	48
• Technical data	49
• Pilot valve	49
• Symbols (basic symbols)	50

Continued on page 2

Overview of contents

Contents	Page
• R-rings for the pilot oil connections	51
• Fixing screws	51
• General dimensions	52
Ordering details, symbols and unit dimensions:	
– Type DR	53, 54
– Type DRW	55 – 56
– Types DREV; DREZ	57, 58
– Types DREWV; DREWZ	

Contents	Page
Pressure sequencing function:	
– Control cover type LFA . DZ…:	
• Ordering details (general)	61
• Symbols (basic symbols)	61
• Technical data	62
• R-rings for the pilot oil connections	62
• Seal kits	63
• Fixing screws	63
• Orifice dimensions	63
Ordering details, symbols and unit dimensions:	
– Type DZ	64, 65
– Type DZW	66, 67

Function, section, symbols

General

The 2-way cartridge valves for pressure control functions are pilot operated poppet or spool valves. The main component designed as a cartridge valve (1) is inserted into a cavity which is standardised to DIN ISO 7368 and is sealed by the control cover (2).

The pilot valve (4) for either manual or electrical proportional pressure control is integrated into the control cover (2) or mounted onto the control cover (2) as a pilot valve with interface connections to DIN 24 340.

By combining the cartridge valve with the control covers different pressure functions can be realised.

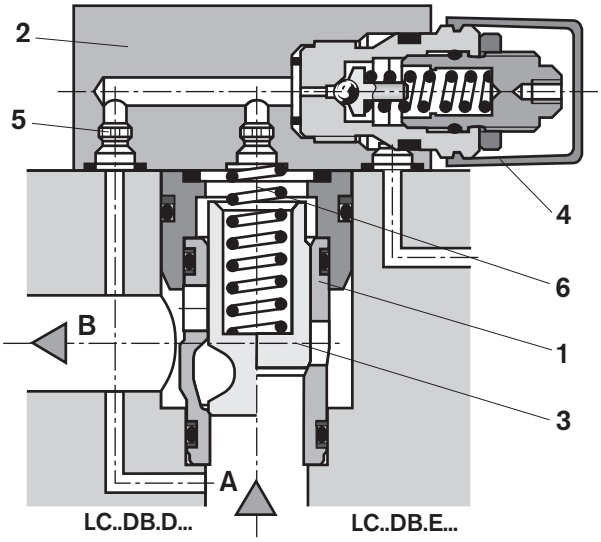

Pressure relief function

Control cover type LFA..DB...

Cartridge valve type LC..DB...

The cartridge valve (1) for the pressure relief function (type LC . DB…) is a poppet valve without an area differential (no effective area at port B). The pressure acting at port A is fed via the pilot supply orifice (5) to the spring side (6) of the element. At pressures below the setting of pilot valve (4) the forces on spool (3) are balanced and the spool remains closed due to the spring force. On reaching the set pressure, spool (3) opens and limits the pressure at port A in relation to the pressure-flow characteristics.

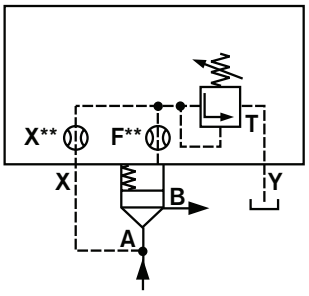

Type LFA..DB...

Type LC..DB...

Pressure reducing function

a) Normally open: Control cover type LFA..DB...

Cartridge valve type LC..DR...

The cartridge valve for the pressure reducing function is a spool valve without an area differential (no effective area at port B).

The same types of cover are used as pilot valves that are used for the pressure relief functions (type LFA..DB...).

The pressure acting at port A is fed to the spring side of the spool via the pilot oil supply orifice. Below the performance limit and pressure set at the pilot valve, the spool is pressure-balanced and is held open by the spring force, so that oil is free to flow from port B to port A.

On reaching the set pressure, the spool closes and reduces the pressure at port A in relation to the pressure-flow characteristics.

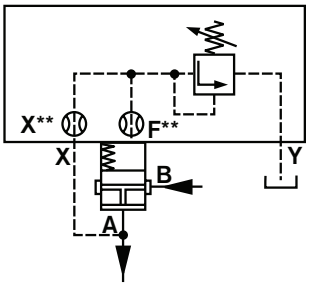

E.g.

Type LFA..DB...

Type LC..DR40...

Function, symbols

b) Normally closed: Control cover type LFA..DR...

Cartridge valve type LC..DB40D...

For the pressure reducing function with opening characteristics a pressure relief valve cartridge (type LC..DB40D...) and a control cover with a pressure reducing valve (type LFA..DR...) as the pilot valve are used. The pilot oil is fed from port A via the pilot supply orifice and the open pilot valve to side B.

The main spool opens and allows free-flow from port A to port B.

On reaching the set pressure, the spool closes and reduces the pressure at port B in relation to the pressure-flow characteristics. Possible excess pressures occurring on the secondary side are led away to tank via the third port of the pilot valve. By fitting a directional valve, an additional isolating function can also be attained (type LFA..DRW...).

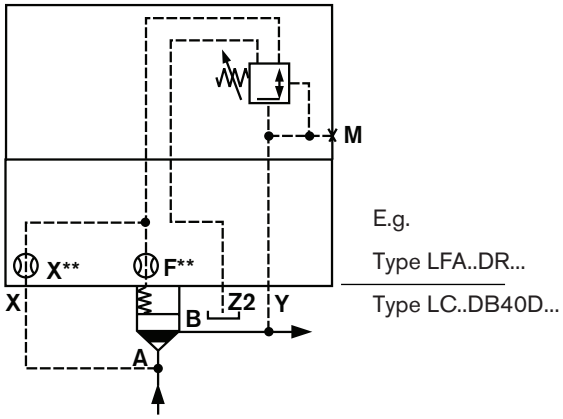

Pressure sequencing function

Control cover type LFA..DZ...

Cartridge valve type LC..DB...

This function enables a pressure-dependent sequencing of a second system.

The required sequencing pressure is set by the pilot valve which is integrated into the control cover.

The pilot oil supply may be either external (pilot oil port X) or internal (from port A via pilot oil port X or Z2).

The spring chamber of the pilot control is drained at zero pressure via ports Y or Z1 to tank.

When the pressure set at the pilot control spring is reached, the pilot valve switches and unloads the spring chamber of the main valve to tank. The main spools opens and makes the connection from port A to B possible.

In version LFA..DZW..., the required spool position may be selected by means of an electrically operated pilot valve (not included with the scope of control cover LFA..DZW... supply) in addition to the normal hydraulic control.

Circuit examples

Example 1: (circuit for the pressure dependent unloading of the low pressure system)

In the circuit shown, the system is fed by a high pressure pump and a low pressure pump. The system pressure p_S acts externally from the high pressure side via the pilot oil port X on the pilot valve which, on reaching the set pressure, switches the low pressure side to give zero pressure circulation. The check valve RV (not included within the scope of supply) prevents the high pressure system from flowing into the low pressure system which is now at zero pressure.

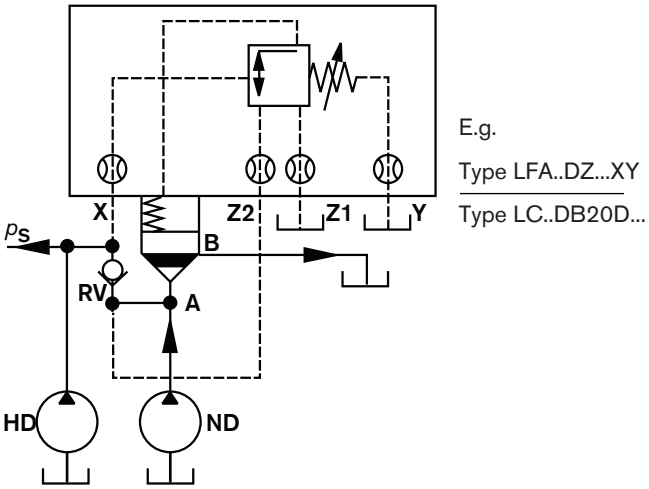

Example 2: (circuit for the pressure dependent sequencing of a 2nd system)

With this circuit, oil is allowed to flow into system 2 when the pressure in system 1 has reached a pre-set value. The pilot oil supply is internal from port A of the main valve.

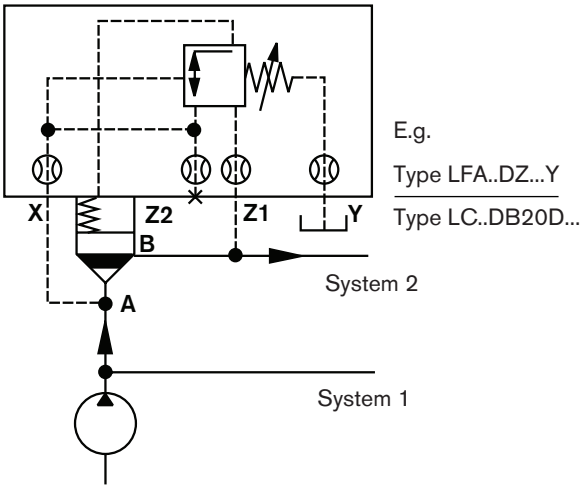

Installation cavity and porting pattern to DIN ISO 7368 - dimensions in mm (inches)

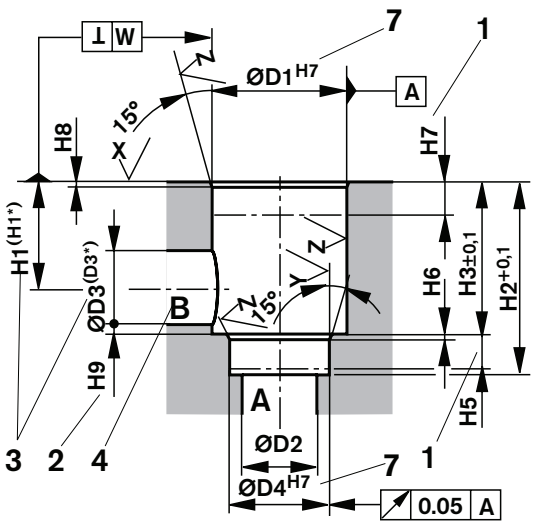

X ✓ = ✓ R_{max} 4

Y ✓ = ✓ R_{max} 8

Z ✓ = ✓ R_z 10

NS 16 to 63

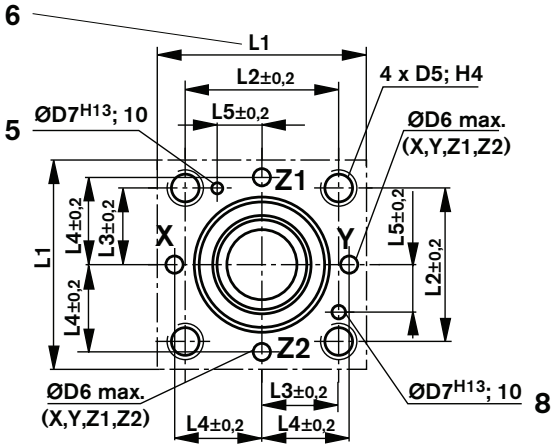

NS 80, 100

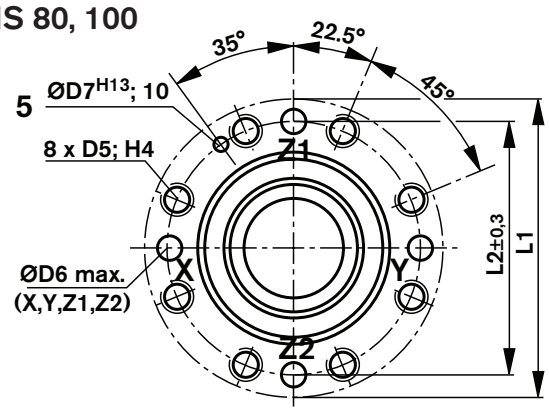

NS	16	25	32	40	50	63	80	100
ØD1 H7	32 (1.260)	45 (1.771)	60 (2.362)	75 (2.953)	90 (3.543)	120 (4.724)	145 (5.709)	180 (7.087)
ØD2	16 (0.630)	25 (0.984)	32 (1.260)	40 (1.569)	50 (1.969)	63 (2.480)	80 (3.150)	100 (3.937)
ØD3	16 (0.630)	25 (0.984)	32 (1.260)	40 (1.575)	50 (1.969)	63 (2.480)	80 (3.150)	100 (3.937)
(ØD3*)	25 (0.984)	32 (1.260)	40 (1.575)	50 (1.969)	63 (2.480)	80 (3.150)	100 (3.937)	125 (4.921)
ØD4 H7	25 (0.984)	34 (1.339)	45 (1.772)	55 (2.165)	68 (2.677)	90 (3.543)	110 (4.331)	135 (5.315)
ØD5	M8 (5/16")	M12 (1/2")	M16 (5/8")	M20 (3/4")	M20 (7/8")	M30 (1-1/4")	M24 (1")	M30 (1-1/4")
ØD6 1)	4 (0.157)	6 (0.236)	8 (0.315)	10 (0.394)	10 (0.394)	12 (0.472)	16 (0.630)	20 (0.787)
ØD7 H13	4 (0.157)	6 (0.236)	6 (0.236))	6 (0.236)	8 (0.315)	8 (0.315)	10 (0.394)	10 (0.394)
H1	34 (1.34)	44 (1.73)	52 (2.05)	64 (2.52)	72 (2.83)	95 (3.74)	130 (5.12)	155 (6.10)
(H1*)	29.5 (1.16)	40.5 (1.59)	48 (1.89)	59 (2.32)	65.5 (2.58)	86.5 (3.40)	120 (4.72)	142 (5.59)
H2	56 (2.20)	72 (2.83)	85 (3.35)	105 (4.13)	122 (4.80)	155 (6.10)	205 (8.07)	245 (9.65)
H3	43 (1.69)	58 (2.28)	70 (2.76)	87 (3.43)	100 (3.94)	130 (5.12)	175±0.2 (6.89)	210±0.2 (8.27)
H4	20 (0.79)	25 (0.98)	35 (1.38)	45 (1.77)	45 (1.77)	65 (2.56)	50 (1.97)	63 (2.48)
H5	11 (0.43)	12 (0.47)	13 (0.51)	15 (0.59)	17 (0.67)	20 (0.79)	25 (0.98)	29 (1.14)
H6	2 (0.08)	2.5 (0.10)	2.5 (0.10)	3 (0.12)	3 (0.12)	4 (0.16)	5 (0.20)	5 (0.20)
H7	20 (0.79)	30 (1.18)	30 (1.18)	30 (1.18)	35 (1.38)	40 (1.57)	40 (1.57)	50 (1.97)
H8	2 (0.08)	2.5 (0.10)	2.5 (0.10)	3 (0.12)	4 (0.16)	4 (0.16)	5 (0.20)	5 (0.20)
H9	0.5 (0.02)	1 (0.04)	1.5 (0.06)	2.5 (0.10)	2.5 (0.10)	3 (0.12)	4.5 (0.18)	4.5 (0.18)
L1	65/80 (2.56/3.15)	85 (3.35)	102 (4.02)	125 (4.92)	140 (5.51)	180 (7.09)	Ø250 (9.84)	Ø300 (11.81)
L2	46 (1.81)	58 (2.28)	70 (2.76)	85 (3.35)	100 (3.94)	125 (4.92)	Ø200 (7.87)	Ø245 (9.65)
L3	23 (0.91)	29 (1.14)	35 (1.38)	42.5 (1.67)	50 (1.97)	62.5 (2.46)	–	–
L4	25 (0.98)	33 (1.30)	41 (1.61)	50 (1.97)	58 (2.28)	75 (2.95)	–	–
L5	10.5 (0.41)	16 (0.63)	17 (0.67)	23 (0.91)	30 (1.18)	38 (1.50)	–	–
W	0.05 (0.002)	0.05 (0.002)	0.1 (0.004)	0.1 (0.004)	0.1 (0.004)	0.2 (0.008)	0.2 (0.008)	0.2 (0.008)

1) Max. dim.

1 Depth of fit

2 Reference dimension

3 For diameters of port B other than ØD3 or (ØD3*), the distance from the cover mounting surface to the centre of this hole must be calculated.

4 Port B may be moved about the central axis of port A. Care must however be taken to ensure that the fixing holes and control holes are not damaged.

5 Drilling for location pin (cover location pin fitted to DIN 24 342)

6 **Note on NS 16 porting pattern:**
Length L1 (axis x–y drilling) is 80 mm.

7 For Ø ≤ 45 mm → fit H8 is permitted!

8 Drilling for locating pin with functions as a main pressure relief valve (cover locating pin has to be appropriately relocated during assembly)

Pressure relief function

Ordering details: pressure relief cartridge valve (without control cover)

LC [ ] **DB** [ ] [ ] [ ] / [ ]

Nominal size 16	(Series 7X)	= 16
Nominal size 25		= 25
Nominal size 32		= 32
Nominal size 40		= 40
Nominal size 50		= 50
Nominal size 63		= 63
Nominal size 80	(Series 6X)	= 80
Nominal size 100		= 100

Opening pressure approx. 0 bar (without spring)	= 00
Opening pressure approx. 2 bar (29 PSI)	= 20
Opening pressure approx. 3 bar (44 PSI)	= 30 [1]
Opening pressure approx. 4 bar (58 PSI)	= 40
Opening pressure approx. 5 bar (73 PSI)	= 50 [2]
Opening pressure approx. 8 bar (116 PSI)	= 80 [3]

E =	Poppet valve **without** orifice (standard)	
D =	Spool poppet valve **without** orifice (standard)	
A =	Poppet valve **with** orifice	
B =	Spool poppet valve **with** orifice	

7X =	(NS 16 to 63) (70 to 79: unchanged installation and connection dimensions)	Series 70 to 79
6X =	(NS 80 and 100) (60 to 69: unchanged installation and connection dimensions)	Series 60 to 69

No code =	NBR seals
V	FKM seals (other seals on request)

Attention!
The compatibility of the seals and pressure fluid has to be taken into account!

[1] Opening pressure 3.0 bar only with NS16 for fitting a pilot operated pressure relief valve type DBC . -5X/…SO187 (see catalogue sheet RE 25 802)

[2] Only with NS 16, 25 and 32

[3] Special installation space is required (see page 12)

Symbols: cartridge valves (for versions see ordering details)

Poppet valve **without** orifice Version **„E“**	Poppet valve **with** orifice Version **„A“**	Spool poppet valve **without** orifice Version **„D“**	Spool poppet valve **with** orifice Version **„B“**
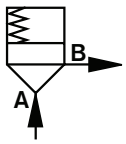	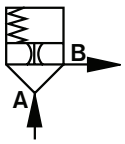	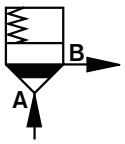	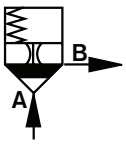

Technical data (for applications outside these parameters, please consult us!)

Pressure fluid		Mineral oil (HL, HLP) to DIN 51 524 [1]; Fast bio-degradable pressure fluids to VDMA 24 568 (also see RE 90 221); HETG (rape seed oil) [1]; HEPG (polyglycols) [2]; HEES (synthetic ester) [2]; Other pressure fluids on request
Pressure fluid temperature range	°C (F°)	– 30 to + 80 (– 86 to + 176) for NBR seals
		– 20 to + 80 (– 68 to + 176) for FKM seals
Viscosity range	mm^2/s (SUS)	2.8 to 380 (13 to 1761)
Cleanliness class to ISO code		Maximum permissible degree of contamination of the pressure fluid is to ISO 4406 (C) class 20/18/15 [3]

[1] Suitable for NBR **and** FKM seals
[2] **Only** suitable for FKM seals

2-way cartridge valve

Maximum operating pressure – Ports A and B	bar (PSI)	420							
Maximum flow (recommended)	**NS**	**16**	**25**	**32**	**40**	**50**	**63**	**80**	**100**
– Poppet valve cartridges „E“ and „A“	L/min	300	450	600	1000	1600	2500	4500	7000
	(GPM)	(79)	(119)	(159)	(264)	(423)	(660)	(1189)	(1849)
– Spool valve cartridges „D“ and „B“	L/min	175	300	450	700	1400	1750	3200	4900
	(GPM)	(46)	(79)	(119)	(184)	(370)	(462)	(845)	(1294)

[3] The cleanliness class stated for the components must be adhered to in hydraulic systems. Effective filtration prevents faults from occurring and at the same time increases the component service life.
For the selection of filters see catalogue sheets RE 50 070, RE 50 076 and RE 50 081.

Characteristic curves: NS 16 - measured with HLP 46; $\vartheta_{oil\ -/}$ = 40 °C (104°F) ± 5 °C (41°F)

The characteristic curves were measured with an external pilot oil drain at zero pressure. With an internal pilot oil drain the inlet pressure is increased by the pressure being applied at port B.

Manual pressure adjustment, type LFA 16 **DB**… and type LFA 16 **DBW**…

Type LC 16 DB.E… (with poppet valve)

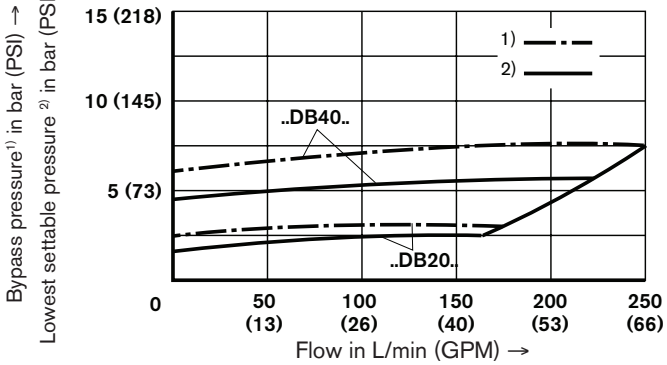

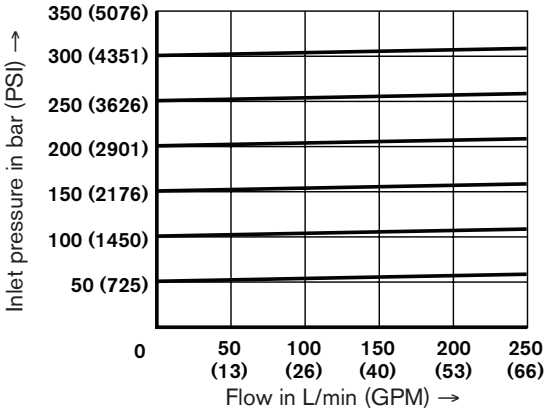

Type LC 16 DB.D… (with poppet spool valve)

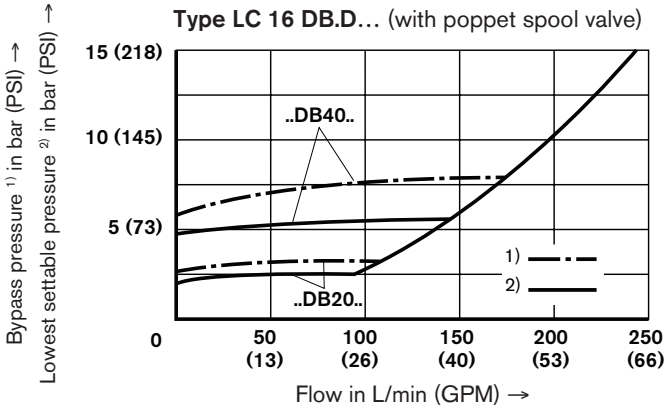

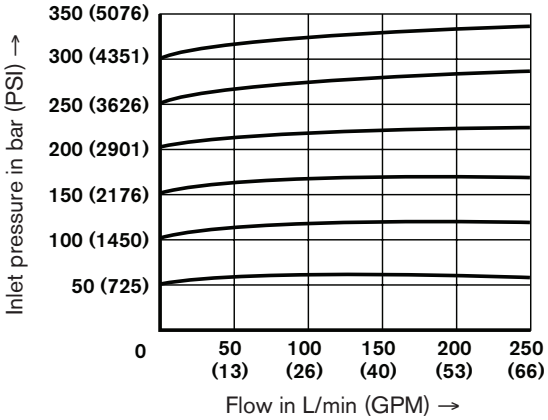

Electrical proportional pressure adjustment, type LFA 16 **DBE**…

Type LC 16 DB.E… (with poppet valve)

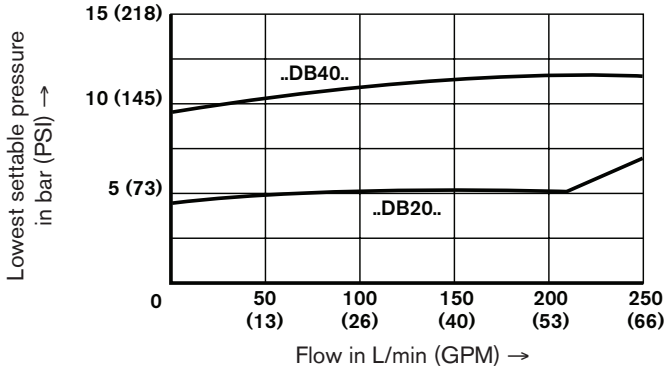

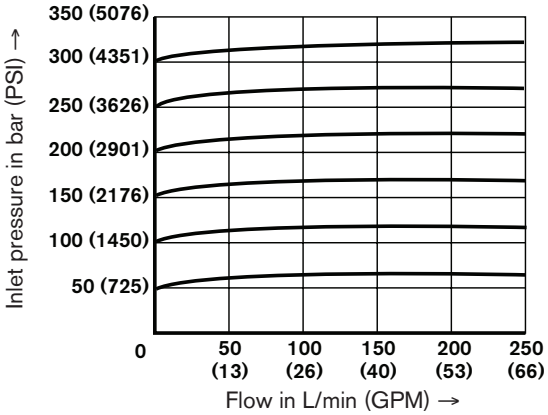

Type LC 16 DB.D… (with poppet spool valve)

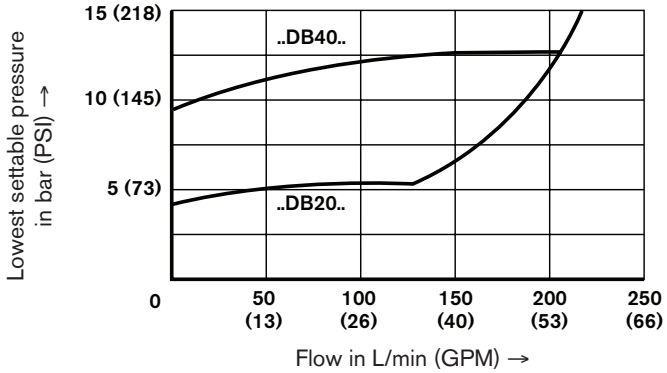

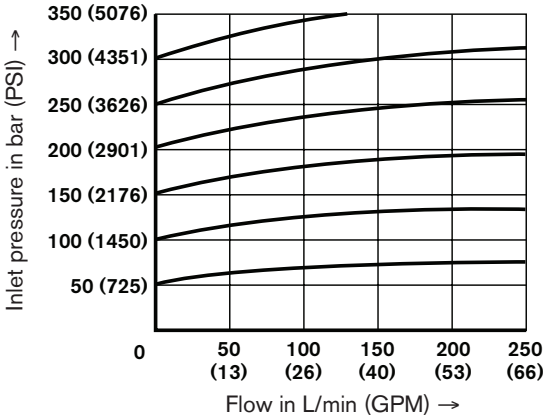

Characteristic curves: NS 25 - measured with HLP 46; $\vartheta_{oil\ -/} = 40$ °C (104°F) ± 5 °C (41°F)

The characteristic curves were measured with an external pilot oil drain at zero pressure. With an internal pilot oil drain the inlet pressure is increased by the pressure being applied at port B.

Manual pressure adjustment, type LFA 25 **DB**… and type LFA 25 **DBW**…

Type LC 25 DB.E… (with poppet valve)

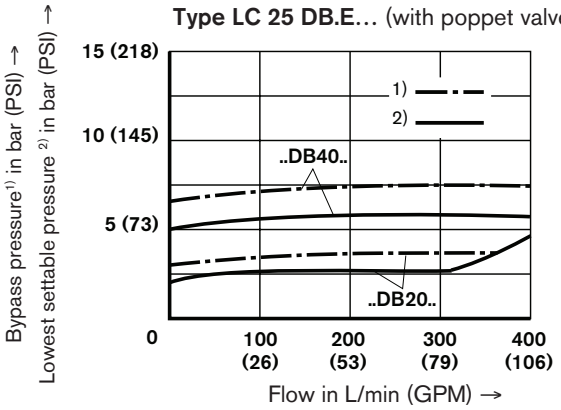

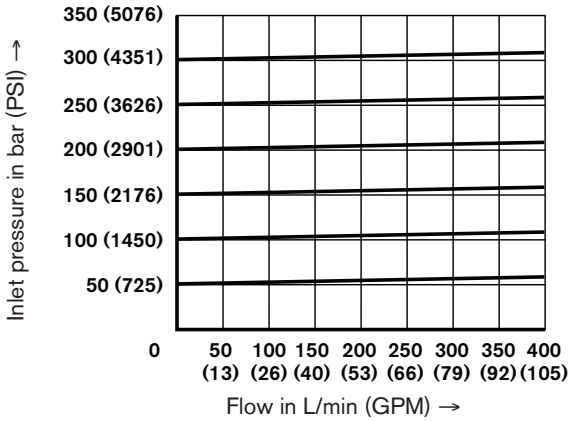

Type LC 25 DB.D… (with poppet spool valve)

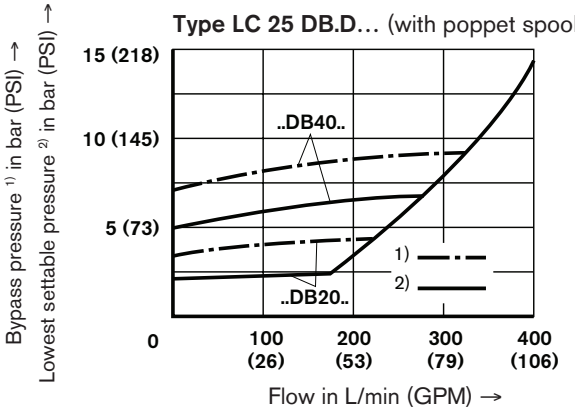

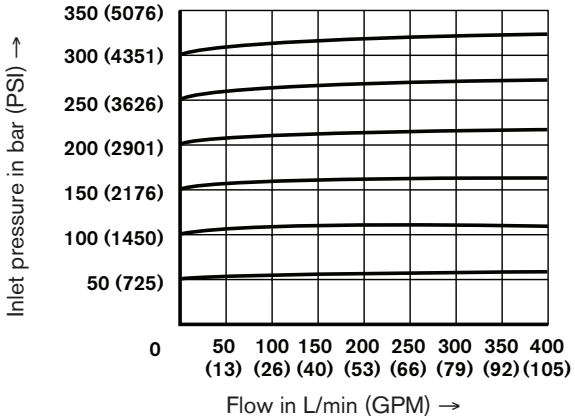

Electrical proportional pressure adjustment, type LFA 25 **DBE**…

Type LC 25 DB.E… (with poppet valve)

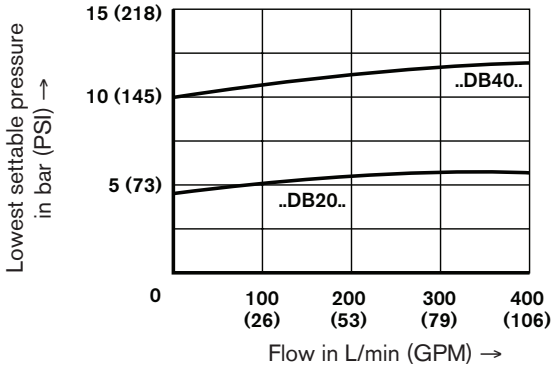

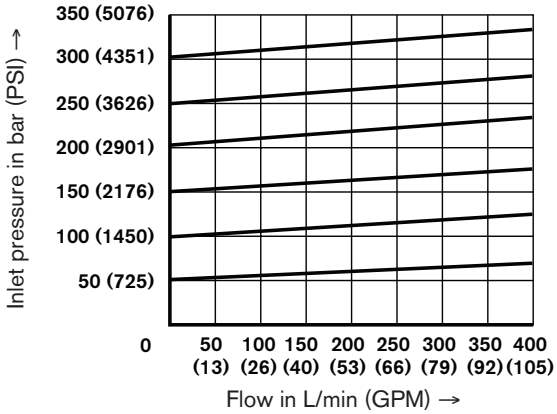

Type LC 25 DB.D… (with poppet spool valve)

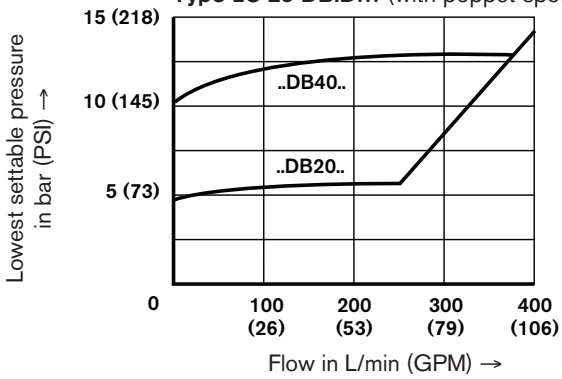

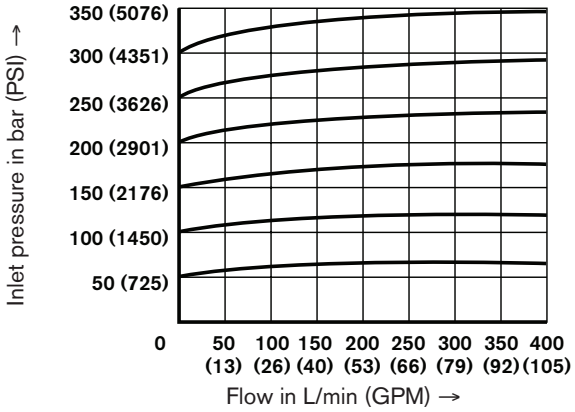

Characteristic curves: NS 32 - measured with HLP 46; $\vartheta_{oil\text{-}/}$ = 40 °C (104°F) ± 5 °C (41°F)

The characteristic curves were measured with an external pilot oil drain at zero pressure. With an internal pilot oil drain the inlet pressure is increased by the pressure being applied at port B.

Manual pressure adjustment, type LFA 32 **DB**… and type LFA 32 **DBW**…

Type LC 32 DB.E… (with poppet valve)

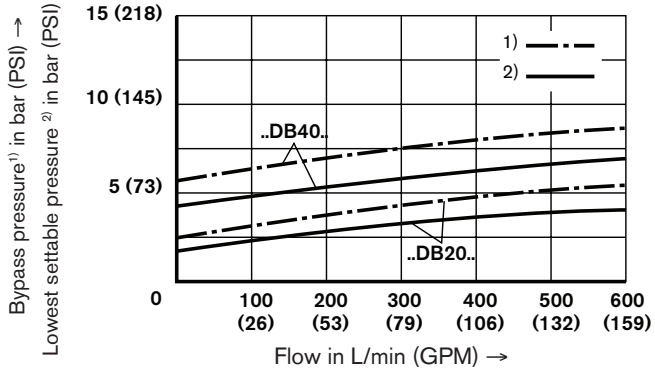

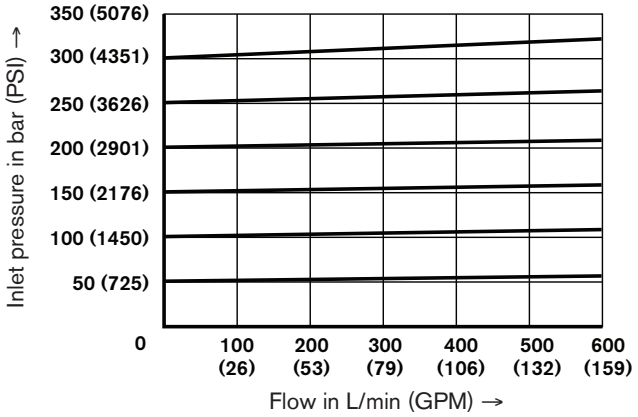

Type LC 32 DB.D… (with poppet spool valve)

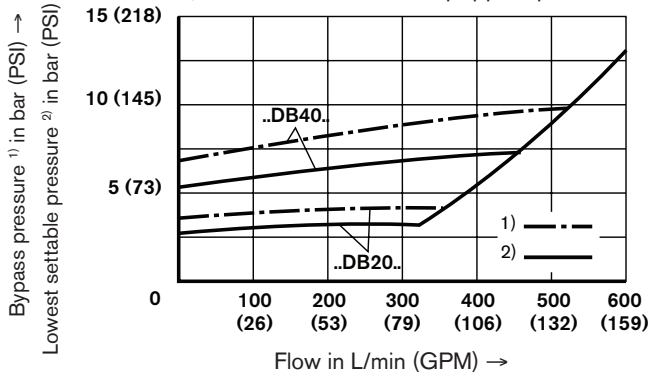

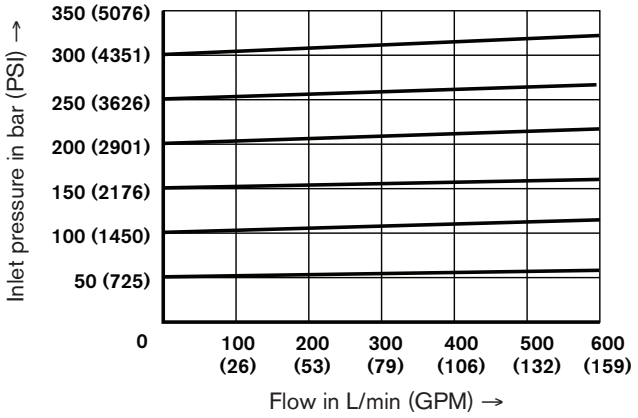

Electrical proportional pressure adjustment, type LFA 32 **DBE**…

Type LC 32 DB.E… (with poppet valve)

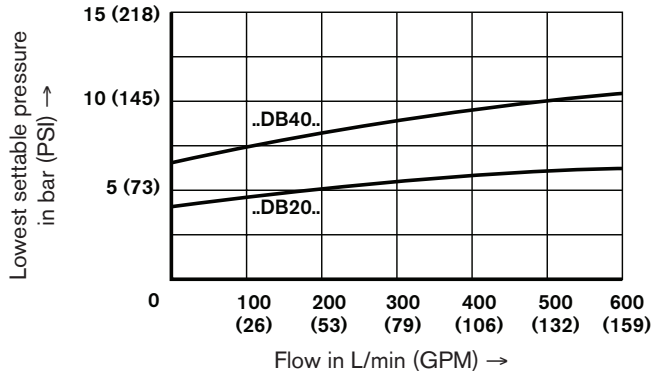

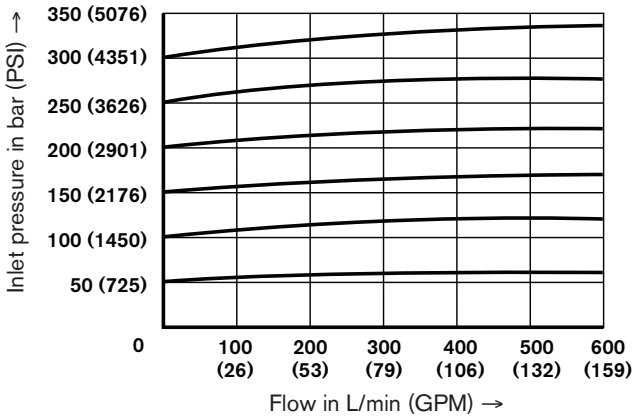

Type LC 32 DB.D… (with poppet spool valve)

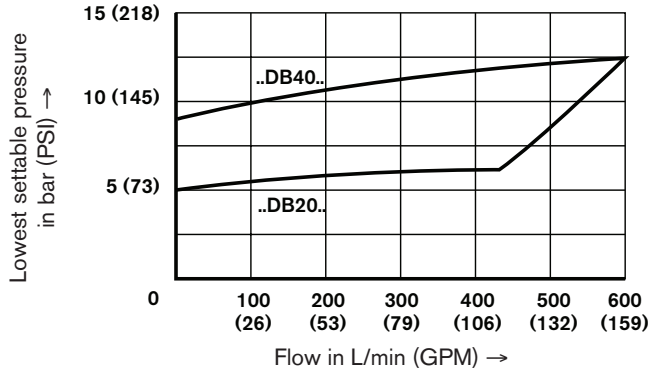

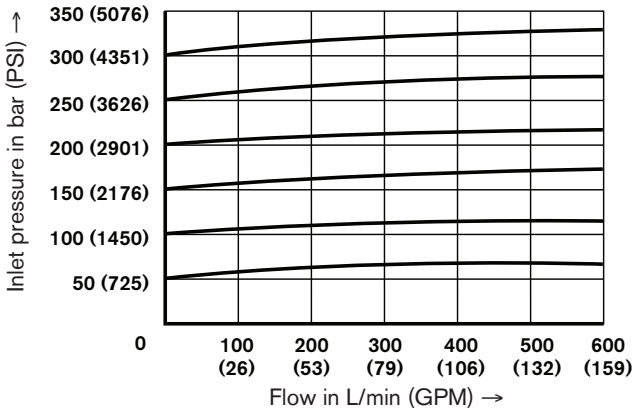

Characteristic curves: NS 40 - measured with HLP 46; $\vartheta_{oil\ -/}$ = 40 °C (104°F) ± 5 °C (41°F)

The characteristic curves were measured with an external pilot oil drain at zero pressure. With an internal pilot oil drain the inlet pressure is increased by the pressure being applied at port B.

Manual pressure adjustment, type LFA 40 **DB**… and type LFA 40 **DBW**…

Type LC 40 DB.E… (with poppet valve)

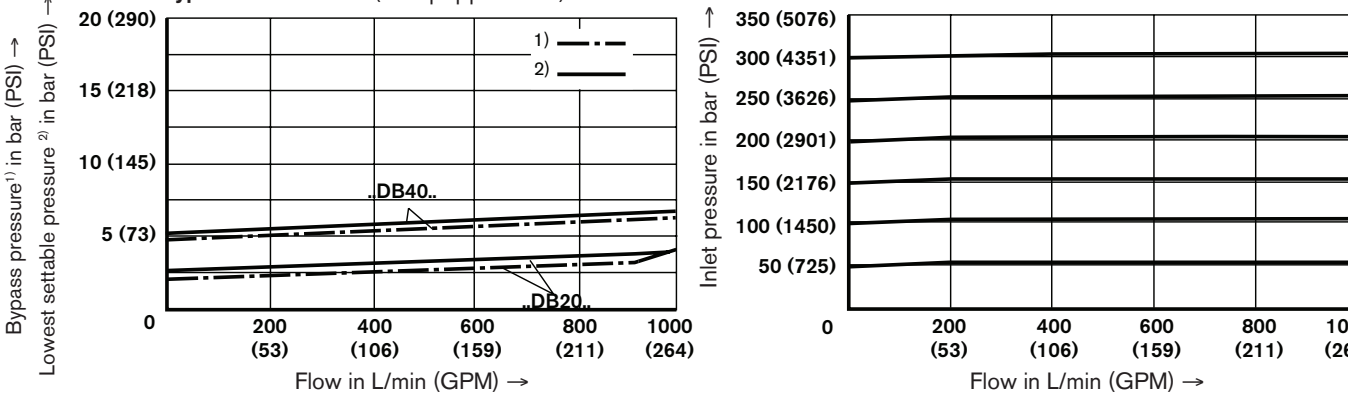

Type LC 40 DB.D… (with poppet spool valve)

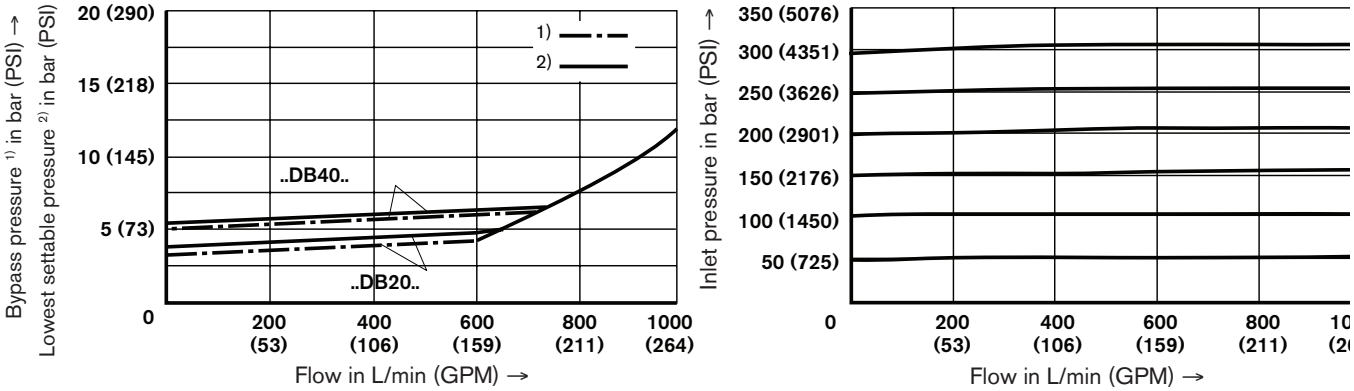

Electrical proportional pressure adjustment, type LFA 40 **DBE**…

Type LC 40 DB.E… (with poppet valve)

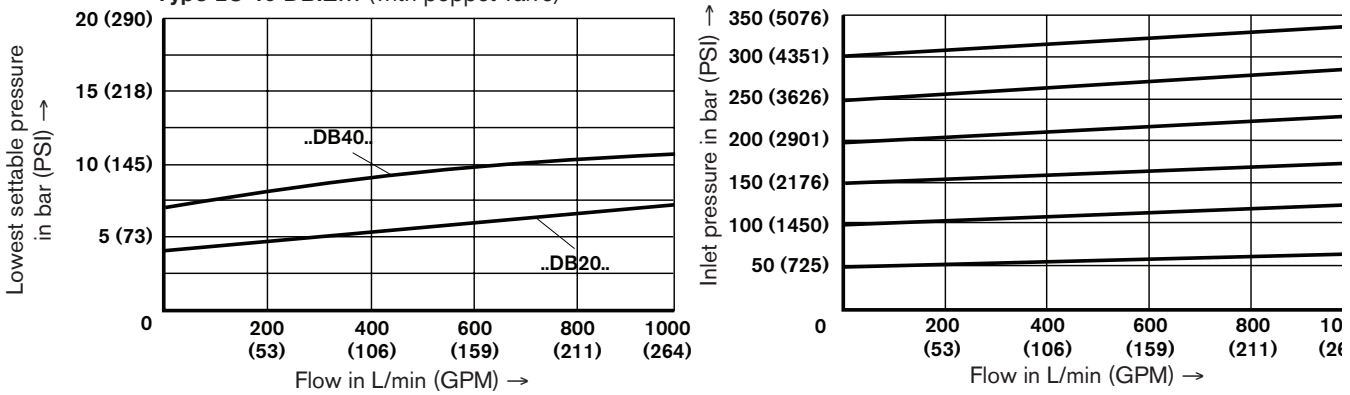

Type LC 40 DB.D… (with poppet spool valve)

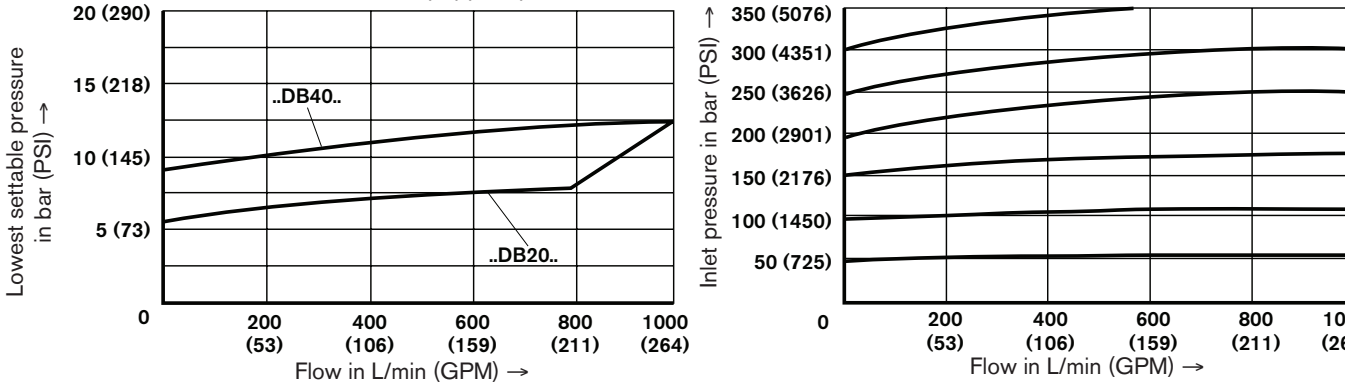

Characteristic curves: NS 50 - measured with HLP 46; $\vartheta_{oil\ -/}$ = 40 °C (104°F) ± 5 °C (41°F)

The characteristic curves were measured with an external pilot oil drain at zero pressure. With an internal pilot oil drain the inlet pressure is increased by the pressure being applied at port B.

Manual pressure adjustment, type LFA 50 **DB**… and type LFA 50 **DBW**…

Type LC 50 DB.E… (with poppet valve)

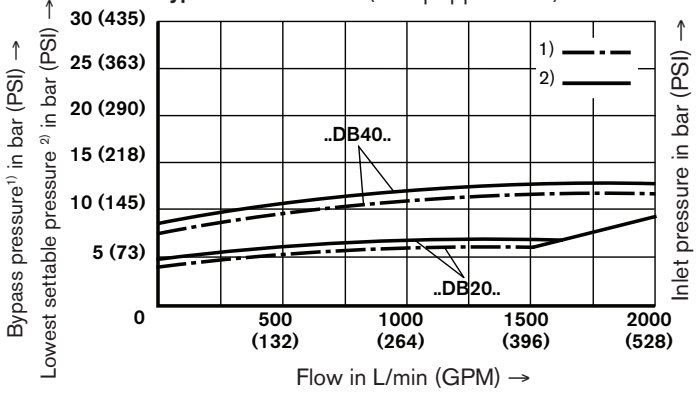

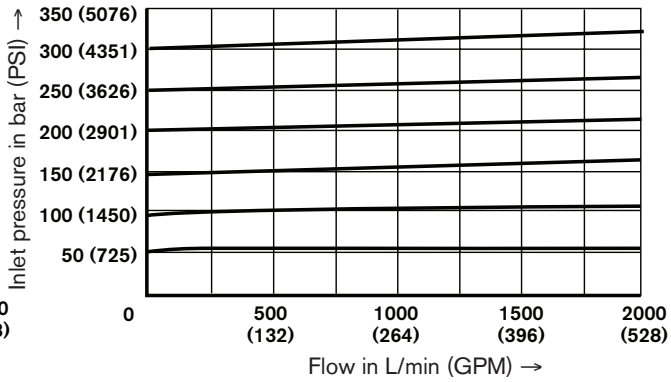

Type LC 50 DB.D… (with poppet spool valve)

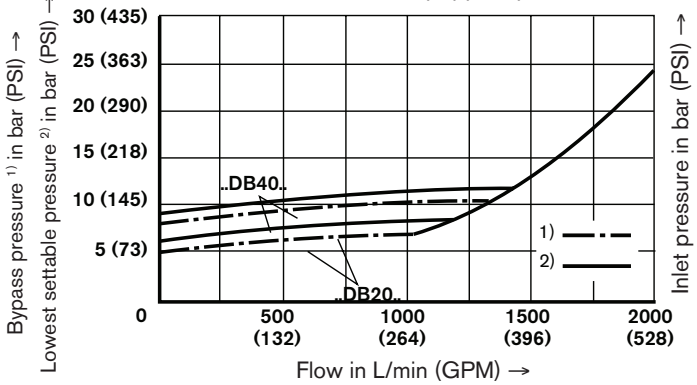

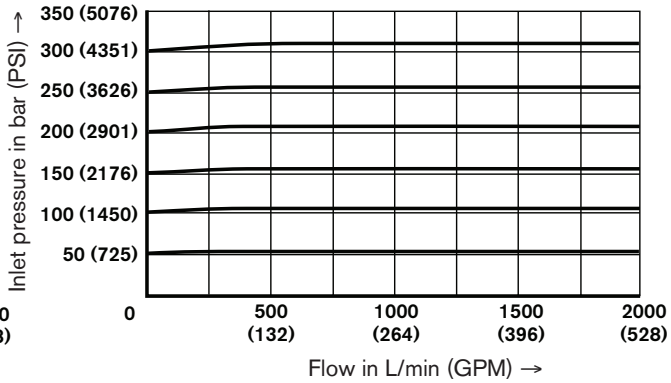

Electrical proportional pressure adjustment, type LFA 50 **DBE**…

Type LC 50 DB.E… (with poppet valve)

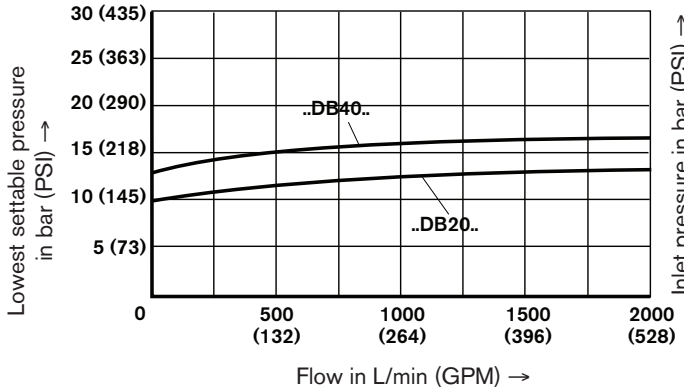

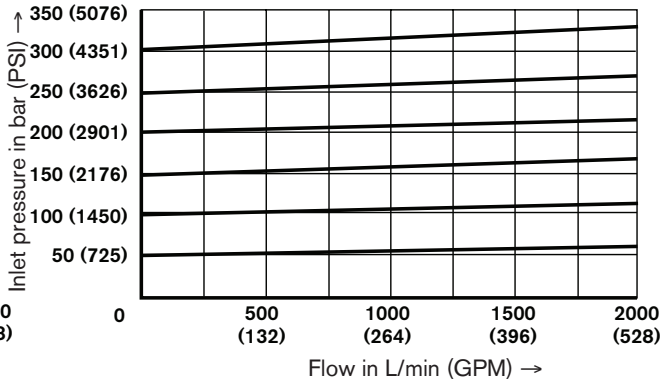

Type LC 50 DB.D… (with poppet spool valve)

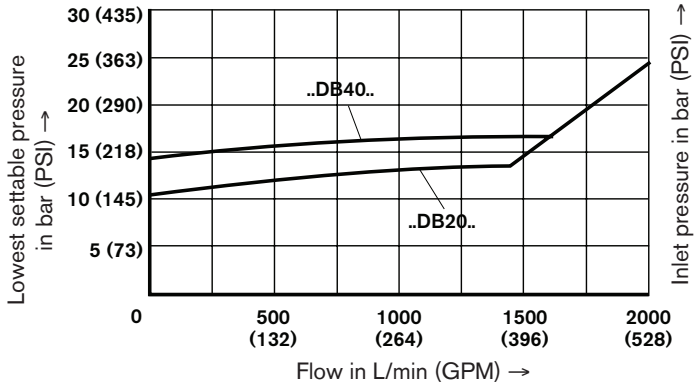

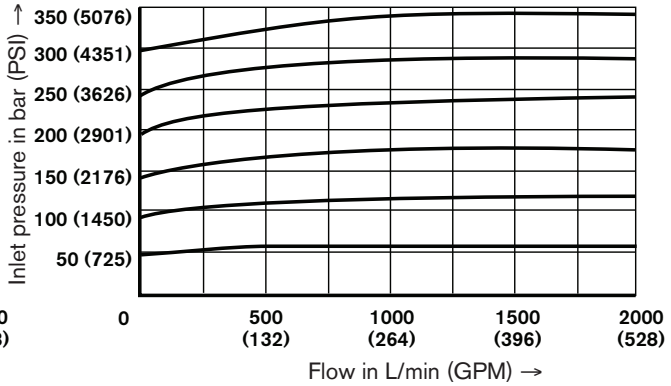

Characteristic curves: NS 63 - measured with HLP 46; $\vartheta_{oil\ -/}$ = 40 °C (104°F) ± 5 °C (41°F)

The characteristic curves were measured with an external pilot oil drain at zero pressure. With an internal pilot oil drain the inlet pressure is increased by the pressure being applied at port B.

Manual pressure adjustment, type LFA 63 **DB**… and type LFA 63 **DBW**…

Type LC 63 DB.E… (with poppet valve)

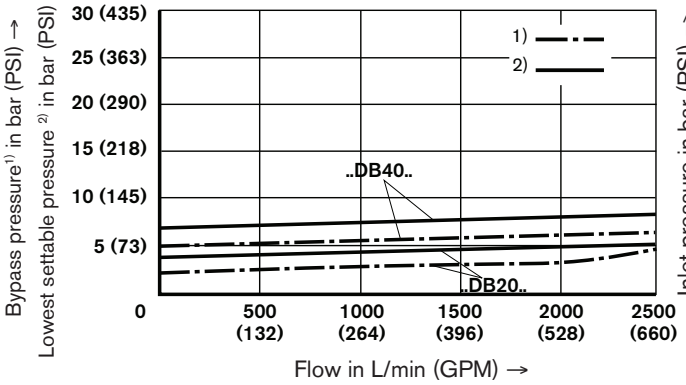

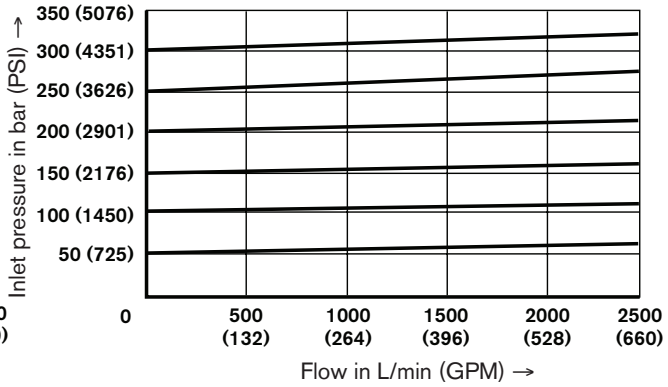

Type LC 63 DB.D… (with poppet spool valve)

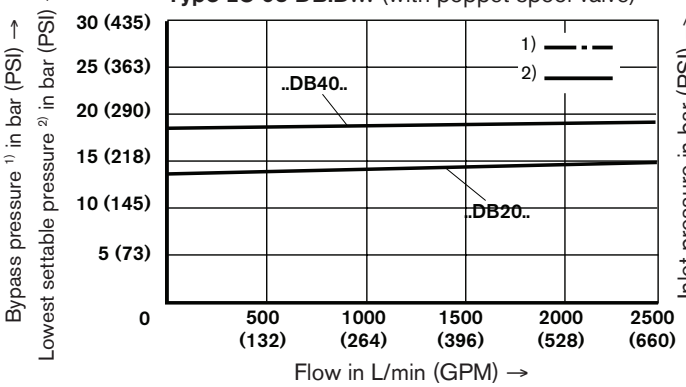

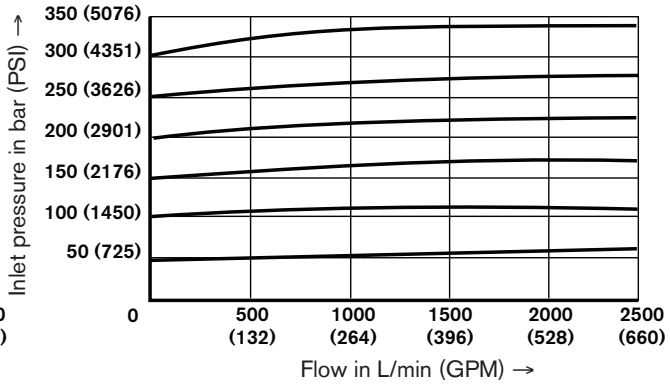

Electrical proportional pressure adjustment, type LFA 63 **DBE**…

Type LC 63 DB.E… (with poppet valve)

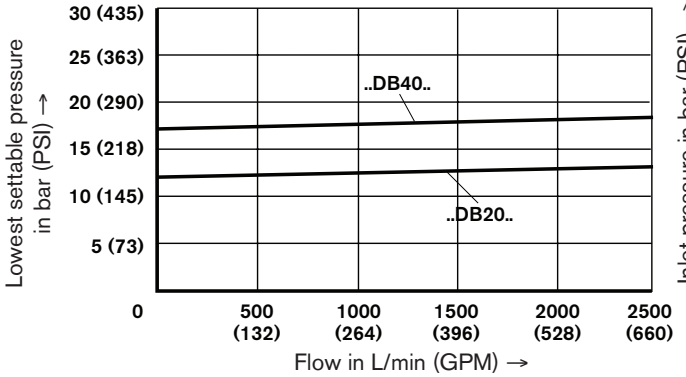

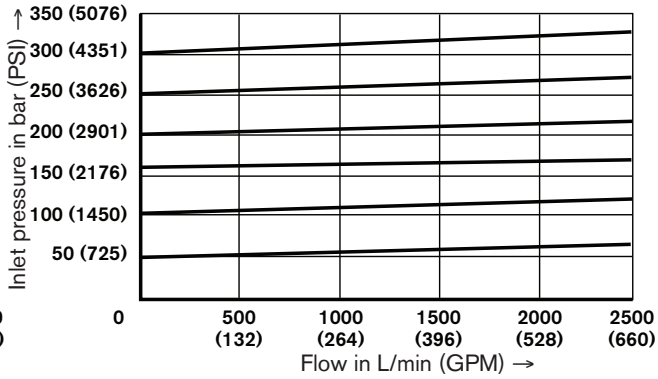

Type LC 63 DB.D… (with poppet spool valve)

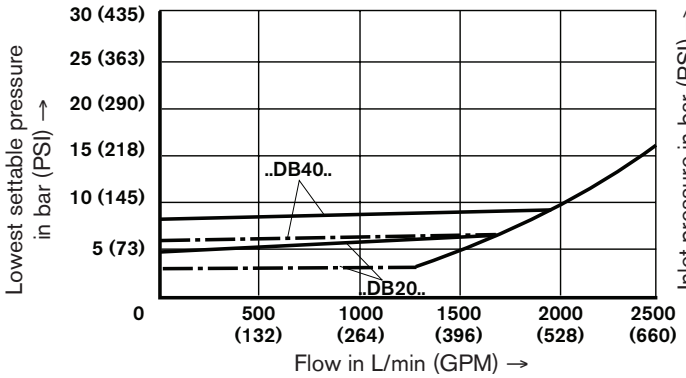

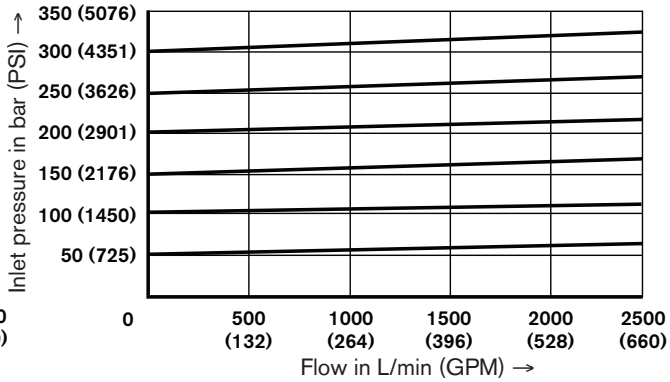

Seal kits for cartridge valves type LC...

Nominal size	Material No.	
	NBR seals	FKM seals
16	R900313104	R900313107
25	R900313105	R900313108
32	R900313106	R900313109
40	R900873022	R900873025

Nominal size	Material No.	
	NBR seals	FKM seals
50	R900873023	R900873026
63	R900873024	R900873027
80	R900314058	R900314067
100	R900314059	R900314068

Compression springs for cartridge valves type LC...

NS	Spring dimensions in mm	Opening pressure in bar (PSI)	Material No.
16	10.2/1.3 x 40.5/8.0	2.0 (29)	R900062747
	10.0/1.6 x 38.2/9.0	3.0 (44)	R900062753
	9.8/1.7 x 38.0/9.0	4.0 (58)	R900062754
	9.7/1.9 x 35.7/8.5	5.0 (73)	R900062757
	9.2/2.4 x 60.5/14.5	8.0 [1] (116[1])	R900082073
25	15.3/2.25 x 55.0/8.0	2.0 (29)	R900062762
	14.9/2.7 x 53.4/8.5	3.0 (44)	R900062764
	14.7/2.8 x 53.5/8.5	4.0 (58)	R900062820
	14.6/3.0 x 52.5/8.5	5.0 (73)	R900062819
	14.1/3.5 x 78.5/12.0	8.0 [1] (116[1])	R900082072
32	19.6/2.8 x 69.5/7.5	2.0 (29)	R900062813
	19.2/3.2 x 71.0/8.5	3.0 (44)	R900062783
	19.1/3.4 x 72.0/9.5	4.0 (58)	R900062810
	19.1/3.5 x 72.8/9.0	5.0 (73)	R900062805
	18.5/4.0 x 109/14.5	8.0 [1] (116[1])	R900082071

NS	Spring dimensions in mm	Opening pressure in bar (PSI)	Material No.
40	25.9/4.25 x 63.0/6.0	2.0 (29)	R900206675
	25.7/4.5 x 68.5/6.0	4.0 (58)	R900206673
	24.8/5.3 x 105.0/10.0	8.0 [1] (116[1])	R900206671
50	33.2/5.0 x 82.0/5.5	2.0 (29)	R900206684
	32.8/5.3 x 92.0/6.5	4.0 (58)	R900206681
	31.7/6.5 x 137.0/10.5	8.0 [1] (116[1])	R900206680
63	40.6/6.5 x 108.0/7.0	2.0 (29)	R900206690
	40.7/6.5 x 127.5/7.5	4.0 (58)	R900206692
	38.6/8.5 x 183.5/11.5	8.0 [1] (116[1])	R900206689
80	48.5/8 x 138/7.5	2.0 (29)	R900012353
	49/8 x 152.5/7.5	4.0 (58)	R900024113
100	52.3/9.5 x 176/9.5	2.0 (29)	R900012385
	52.3/9.5 x 195.5/9.5	4.0 (58)	R900024483

[1] These springs require an additional installation length. When using standard control covers an additional sandwich plate type LFA..D22... must be used.

Exception:

Control cover type “D“ can be replaced by type LFA..D8-../F (no sandwich plate required).

Standard types

Typ LC (Cartridge Valve)	Material-Number
LC 16 DB40E7X/	**R900912532**
LC 16 DB40D7X/	**R900912547**
LC 40 DB40E7X/	**R900927969**
LC 40 DB40D7X/	**R900938014**
LC 50 DB40E7X/	**R900938041**
LC 50 DB40D7X/	**R900938040**
LC 63 DB40E7X/	**R900938070**
LC 63 DB40D7X/	**R900938069**

Type LFA (Control Cover)	Material-Number
LFA 16 DB2-7X/315	**R900912757**
LFA 32 DB2-7X/315	**R900912768**
LFA 40 DB2-7X/315	**R900927972**
LFA 50 DB2-7X/315	**R900938163**
LFA 63 DB2-7X/315	**R900938230**
LFA 16 DBW2-7X/315	**R900912805**
LFA 25 DBW2-7X/315	**R900912810**
LFA 32 DBW2-7X/315	**R900912815**
LFA 40 DBW2-7X/315	**R900938096**
LFA 50 DBW2-7X/315	**R900938191**
LFA 63 DBW2-7X/315	**R900938238**

General notes on the ordering details for control covers

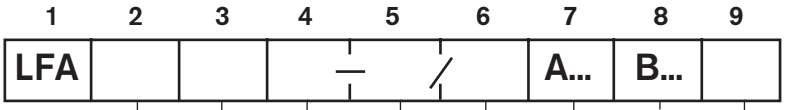

•= Available

Nominal size 16	25	32	40	50	63	80	100	Type [1]	Adjustment type	Series	Pressure stage in bar for nominal sizes 16 to 32	40 to 100	Seal material	Page
•	•	•	•	•	•					7X				
						•	•			6X				
•	•	•	•	•	•	•	•	DB			025 050 100	025 050 100	For ordering details, see pages giving details of the individual cover variations	18 to 20
•	•	•	•	•	•	•	•	DBW			200 315 420	200 315 400		21 to 25
			•	•	•	•	•	DBS				025; 050; 100; 200; 315; 400		21 to 25
•	•	•	•	•	•	•	•	DBWD			025 050	025 050		26 to 28
•	•	•	•	•	•	•	•	DBU2A			100	100		29 to 32
•	•	•	•	•	•	•	•	DBU2B			200	200		29 to 32
•	•	•	•	•	•	•	•	DBU3D			315 420	315 400		33 to 37
•	•	•	•	•	•			DBE						38
•	•	•	•	•	•	•	•	DBEM			025; 050; 100; 200; 315; 420	025; 050; 100; 200; 315; 400		39 to 42

[1] For functions, see selection table on page 15

4

Adjustment types for pressure relief valves

1 = Rotary knob
2 = Hexagon with protective cap
3 = Lockable rotary knob with scale (H-key to automotive industry standards)
4 = Rotary knob with scale, not lockable

5

Series

7X = Series 70 to 79 and
6X = Series 60 to 69
(unchanged installation and connection dimensions)

6

Pressure stages

Dependent on the normianl size and permissible working pressure of the pilot valve. For futher details see ordering details for the control cover.

7

Pressure data for DB1, only required for types DBU2 and DBU3D

8

Pressure data for DB2, only required for type DBU3D

Ordering example for type DBU3D
…/315* A 100 B 200 (DB max /DB1/DB2)
*DB max. always first

The control covers are always fitted with a, optimised on our test rig, standard orifice. Orifice details are therefore not required in the type code. Deviating operating conditions could make it necessary to match the orifice size. The orifices are of the threaded type.

Orifice as shown within the main symbol

General notes on the ordering details for control covers: pilot control valve (max. operating pressure)

Pilot control valve		Control cover		Max. operating pressure in bar			Included in type code	Has to be specially ordered
Type	Catalog sheet No.	NS	Type	X	Y, T For pressure control	Y, T Static		
DBD. 2 K2X/… [1]	On request	16 to 32	DB, DBW, DBWD,	420	Zero pressure (up to ≈ 2 bar)	315	•	
DBD. 6 K1X/… [2]	25 402	40 to 63	DBU2., DBU3D,	400		315	•	
DBD. 10 K1X/… [2]	25 402	80, 100	DBEM, DBS	400		315	•	
.WE 6 …	23 178	16 to 63	DBW, DBWD,	350		210 (=); 160 (~)		•
.WE 10 …	23 327	80, 100	DBU2., DBU3D	315		210 (=); 160 (~)		•
M-3SEW 6 …	22 058	16 to 63	DBW, DBS	420		100		•
M-3SED 6 …	22 049	16 to 63	DBW, DBS	315		X-40		•
M-3SEW 10 …	22 075	80, 100	DBW, DBS	420		100		•
M-3SED 10 …	22 045	80, 100	DBW, DBS	315		X-40		•
DBET-6X/…YG24	29 162	16 to 32	DBE, DBEM	350		100		•
DBET-6X/G24…	29 162	40	DBE, DBEM	350		100		•
DBET-6X/…YG24	On request	50 to 100	DBE, DBEM	350		100		•
DBETR…	On request	16 to 100	auf Anfrage					

[1] Possible pressure stages: 25, 50, 100, 200, 315, 420

[2] Possible pressure stages: 25, 50, 100, 200, 315, 400

Note: By combining a 2-way cartridge valve with a pilot control valve, various valve functions can be obtained.
The following components may be considered with porting pattern form A6 (up to NS 63) and form A10 (NS 80 to 100) DIN 24 340.

Valve fixing screws are included within the control cover scope of supply.

Fixing screws: S.H.C.S. to DIN 912-10.9

Pilot control valve Type	Dimensions	Tightening torque in Nm
M-3SEW 6 …	M5 x 45	8.9
M-3SEW 10 …	M6 x 40	15.5
M-3SED 6 …	M5 x 50	8.9
M-3SED 10 …	M6 x 40	15.5

Pilot control valve Type	Dimensions	Tightening torque in Nm
.WE 6 …	M5 x 50	8.9
.WE 10 …	M6 x 40	15.5
DBET …	M5 x 30	8.9

Technical data (for applications outside these parameters, please consult us!)

Maximum operating pressure	bar (PSI)	420 (6092) **Attention:** p_{max} Take the pilot control valve into account!
Pressure fluid [1] Suitable for NBR **and** FKM seals [2] **Only** suitable for FKM seals		Mineral oil (HL, HLP) to DIN 51 524 [1]; Fast bio-degradable pressure fluids to VDMA 24 568 (also see RE 90 221); HETG (rape seed oil) [1]; HEPG (polyglycols) [2]; HEES (synthetic ester) [2]; Other pressure fluids on request
Pressure fluid temperature range	°C (F°)	– 30 to + 80 (–86 to + 176) for NBR seals
		– 20 to + 80 (–68 to + 176) for FKM seals
Viscosity range	mm^2/s (SUS)	2.8 to 380 (12.98 to 1761)
Cleanliness class to ISO code		Maximum permissible degree of contamination of the pressure fluid is to ISO 4406 (C) class 20/18/15 [3]

[3] The cleanliness class stated for the components must be adhered to in hydraulic systems. Effective filtration prevents faults from occurring and at the same time increases the component service life.
For the selection of filters see catalogue sheets RE 50 070, RE 50 076 and RE 50 081.

Pilot control valves (selection table)

	Nom. size 16 to 32	Nom. size 40 to 63	Nom. size 80 and 100	Type	Pilot control valve	Manual pressure setting			Symbols (see page 16)
	•	•	•	DB		**Without** directional valve			1
• = Available				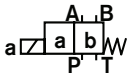		**With** directional valve Position"a"	Position "b"		
				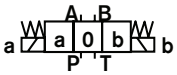		Position"a"	Position"0"	Position "b"	
Directional valve unloading	•	•		DBW	3WE6B9-...	Open	DB function		2 3
	•				M-3SE.6C...				
	•	•			4WE6D...	DB function	Open		
	•				M-3SE.6U...				
			•		3WE10B9-...	Open	DB function		3
			•		4WE10D...	DB function	Open		
				DBS		Open	DB function		4
		•			M-3SE.6C...				
						DB function	Open		
		•			M-3SE.6U...				
			•		M-3SE.10C./...	Open	DB function		
			•		M-3SE.10U./...	DB function	Open		
Isolating function	•	•		DBWD	3WE6B9-...	DB function	Closed		5
			•		3WE10B9-...				
	•	•			3WE6A-...	Closed	DB function		
	•	•			4WE6M..			Open	
			•		3WE10A...				
			•		4WE10M...			Open	
2 spressure stages	•	•			4WE6H...	DBmax. function	Open	DB1 function	6
			•		4WE10H...				
	•	•			4WE6D...		DB1 function		
			•	DBU2A	4WE10D...				
	•	•		DBU2B	4WE6D...	DB1 function	DBmax. function		—
			•		4WE10D...				
3 pressure stages	•	•			4WE6H...	DB2 function	Open	DB1 function	7
			•		4WE10H...				
	•	•			4WE6E...		DBmax. function		
			•		4WE10E...				
	•	•		DBU3D	4WE6D...		DB1 function		
			•		4WE10D...				
						Proportional pressure setting version			
Proportional valves	•	•		DBE	DBET-5X/...	**Without** max. pressure safety limitation			8
	•	•		DBEM	DBET-5X/...	**With** max. pressure safety limitation			9

Open = Bypass circuit **Closed** = Cartridge valve is hydraulically locked **DB function** = Pressure relief function

Symbol overview (basic symbols), pressrue relief function

Valid symbols are shown in the following type descriptions !

1

LFA..DB.-../..NS16 to 100

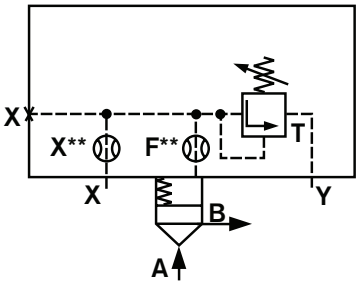

See pages 18 to 20

2

LFA..DBW.-../..NS16 to 32

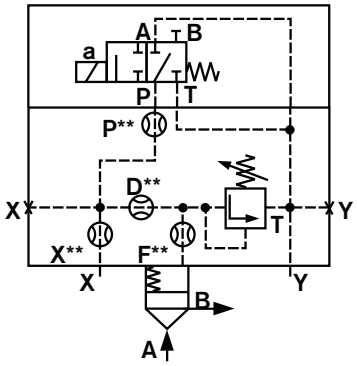

See pages 21, 22

3

LFA..DBW.-../..NS40 to 100

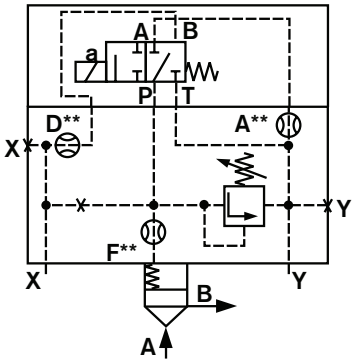

See pages 21 to 25

4

LFA..DBS.-../..NS40 to 100

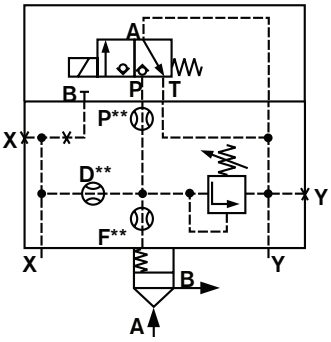

See pages 21 to 25

5

LFA..DBWD.-../..NS16 to 100

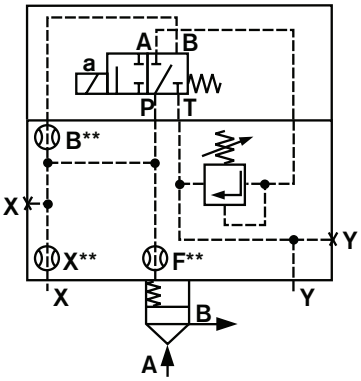

See pages 26 to 28

6

LFA..DBU2A.-../..NS16 to 100

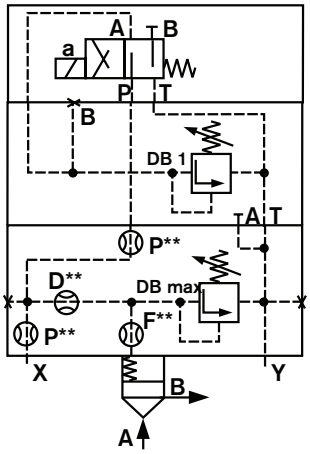

See pages 29 to 32

7

LFA..DBU3D.-../..NS16 to 100

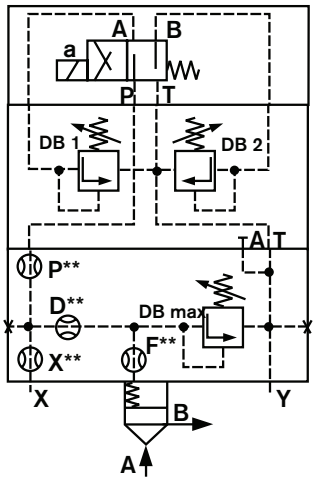

See pages 33 to 37

8

LFA..DBE-../..NS16 to 63

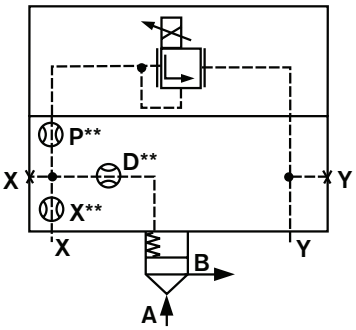

See page 38

9

LFA..DBEM-../..NS16 to 100

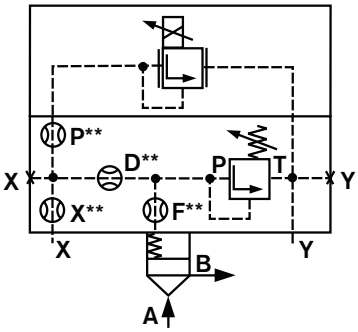

See pages 39 to 42

R-ring dimensions for ports X, Y (included within the scope of supply)

NS	Dimensions mm	Material No. NBR	FKM
16	8.41 x 1.40 x 1.78	R900025407	R900025408
25	9.81 x 1.50 x 1.78	R900017453	R900017610
32	11.18 x 1.60 x 1.78	R900017455	R900017611
40, 50	13.00 x 2.30 x 2.62	R900017457	R900017617
63	18.72 x 2.62 x 2.62	R900024445	R900024446
80	26.57 x 3.53 x 3.53	R900017466	R900017630
100	34.52 x 3.53 x 3.53	R900017472	R900017633

Seal kits for control cover type LFA..

Seal kit for LFA...	Material No.							
	NS 16		NS 25		NS 32		NS 40	
	NBR	FKM	NBR	FKM	NBR	FKM	NBR	FKM
..DB..; DBW..; ..DBS.. ..DBWD..; ..DBEM..	R900313955	R900313956	R900313957	R900313958	R900313802	R900313803	R900313722	R900313723
..DBU2..; ..DBU3..	R900313709	R900313710	R900313711	R900313712	R900313713	R900313714	R900885152	R900313716
DBE..	R900313701	R900313702	R900313703	R900313704	R900313705	R900313706	R900313707	R900313708

Seal kit for LFA...	Material No.							
	NS 50		NS 63		NS 80		NS 100	
	NBR	FKM	NBR	FKM	NBR	FKM	NBR	FKM
..DB..; DBW..; ..DBS.. ..DBWD..;	R900895786	R900313725	R900313726	R900313727	R900310533		R900313054	
..DBU2..; ..DBU3..	R900313717	R900313718	R900313719	R900313720	R900312090			
..DBE..	R900313897	R900313898	R900313899	R900313700				
..DBEM..	R900313893	R900313894	R900313895	R900313896	R900311930		R900312219	

Fixing screws (included within the scope of supply)

S.H.C.S. to DIN 912-10.9

NS	Qty.	Dimensions	Tightening torque in Nm
16	4	M 8 x 45	32
25	4	M 12 x 50	110
32	4	M 16 x 60	270
40	4	M 20 x 70	520
50	4	M 20 x 80	520
63	4	M 30 x 100	1800
80	8	M 24 x 120	900
100	8	M 30 x 120	1800

Orifice thread size

D orifices for type ..DBE.. NS 25 to 63	M8 x 1 tapered
Orifices for NS 80, 100	M8 x 1 tapered (A**, B**, P**, D**) or G 1/4 (X**, F**)
Other built-in orifices	M6 tapered

Control cover with manual pressure adjustment

NS 16 to 100

1	2	3	4	5	6	9	
LFA		DB					

Nom. size 16 = **16**
Nom. size 25 = **25**
Nom. size 32 = **32**
Nom. size 40 = **40**
Nom. size 50 = **50**
Nom. size 63 = **63**
Series 7X

Nom. size 80 = **80**
Nom. size 100 = **100**
Series 6X

Adjustment type

Rotary knob	= 1
Hexagon with protective cap	= 2
Lockable rotary knob with scale (H-key to automotive industry standards)	= 3
Rotary knob with scale **not** lockable	= 4

12 = SAE threaded external connections and UNC mounting bolts
– = Metric threaded connections

No code = NBR seals
V = FKM seals
(other seals on request)

Attention!
The compatibility of the seals and pressure fluid has to be taken into account!

Pressure stages

NS 16, 25 ,32	NS 40, 50, 63, 80, 100
025 = 25 bar	**025** = 25 bar
050 = 50 bar	**050** = 50 bar
100 = 100 bar	**100** = 100 bar
200 = 200 bar	**200** = 200 bar
315 = 315 bar	**315** = 315 bar
420 = 420 bar	**400** = 400 bar

6X = Series 6X (NS 80 and 100)
7X = Series 7X (NS 16 to 63)

Dimensions in mm (inches)

NS 16, 25 ,32

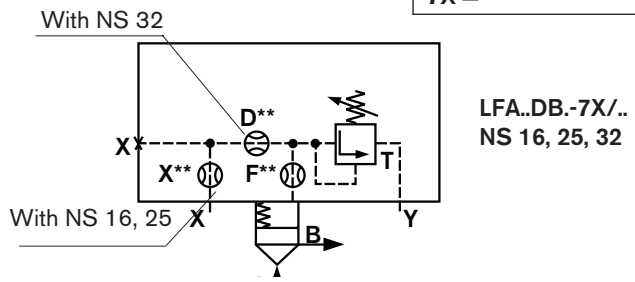

LFA..DB.-7X/..
NS 16, 25, 32

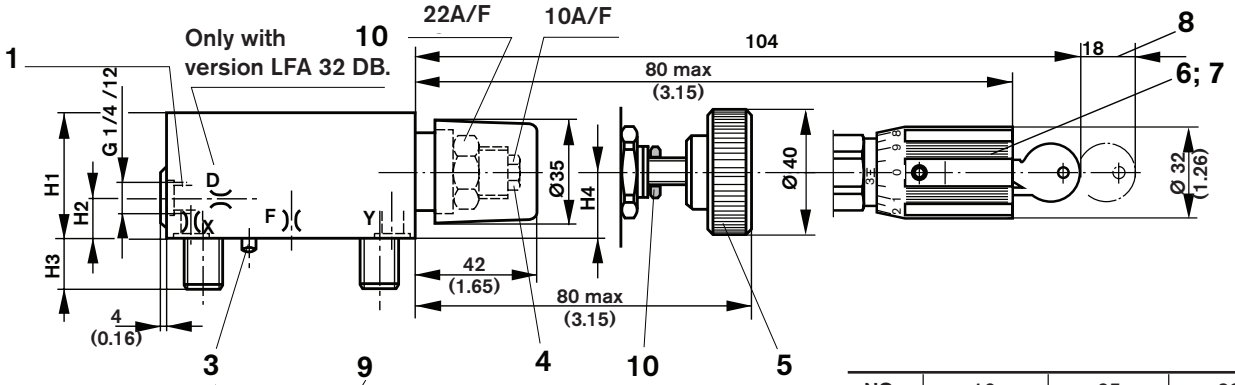

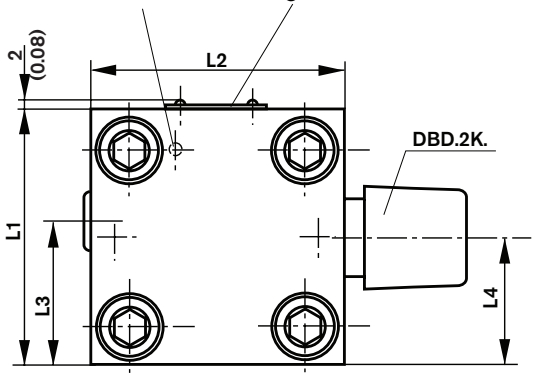

NS	16	25	32
X**[1)]	0.8 (0.03)	0.8 (0.03)	–
F**[1)]	1.0 (0.039)	1.0 (0.039)	1.2 (0.05)
D**[1)]	-	–	0.8 (0.03)
H1	40 (1.57)	40 (1.57)	50 (1.97)
H2	17 (0.67)	19 (0.75)	26 (1.02)
H3	15 (0.59)	24 (0.94)	28 (1.10)
H4	19 (0.75)	19 (0.75)	26 (1.02)
L1	65 (2.56)	85 (3.35)	100 (3.94)
L2	80 (3.15)	85 (3.35)	100 (3.94)
L3	36.5 (1.44)	49 (1.93)	56.5 (2.22)
L4	32.5 (1.28)	45.5 (1.79)	53 (2.07)

** Orifice Ø
1) Orifice M6 tapered

1 Port X optionally as threaded port
3 Locating pin
4 Adjustment type “2”
5 Adjustment type “1”
6 Adjustment type “3”
7 Adjustment type “4”
8 Space required to remove the key
9 Name plate
10 Locknut

Control cover with manual pressure adjustment

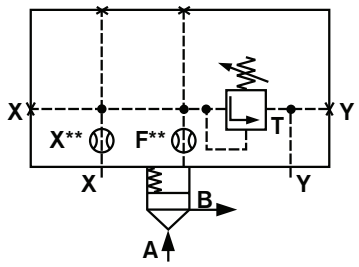

LFA..DB.-7X/..
NS 40, 50, 63

NS 40, 50

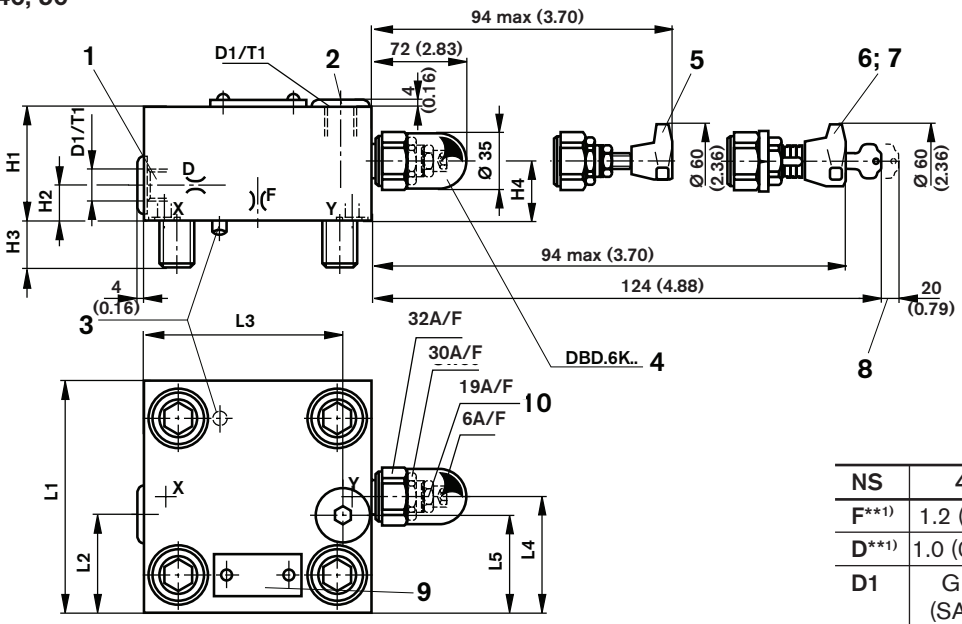

NS 63

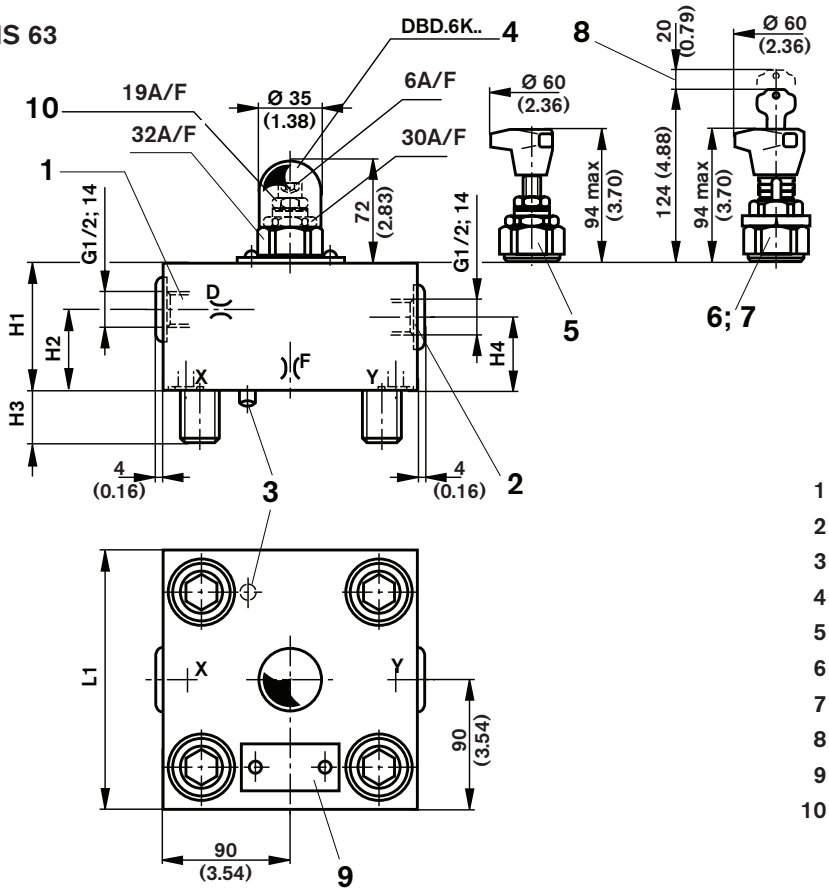

NS	40	50	63
F**[1)]	1.2 (0.05)	1.5 (0.06)	2.0 (0.08)
D**[1)]	1.0 (0.039)	2.0 (0.08)	2.5 (0.10)
D1	G1/4 (SAE-4; 7/16-20)	G1/2 (SAE-8; 3/4-16)	–
H1	60 (2.36)	68 (2.68)	82 (3.29)
H2	28 (1.10)	19.5 (0.77)	30 (1.18)
H3	32 (1.26)	34 (1.34)	50 (1.97)
H4	27 (1.06)	35 (1.38)	45.5 (1.79)
□ L1	125 (4.92)	140 (5.51)	180 (7.09)
L2	69 (2.72)	80 (3.15)	–
L3	89 (3.50)	105 (4.13)	–
L4	76 (2.99)	84 (3.31)	–
L5	60 (2.36)	70 (2.76)	–
T1	12 (0.47)	14 (0.55)	–

** Orifice Ø
[1)] Orifice M6 tapered

1 Port X optionally as a threaded port
2 Port Y optionally as a threaded port
3 Locating pin
4 Adjustment “2”
5 Adjustment “1”
6 Adjustment “3”
7 Adjustment “4”
8 Space required to remove the key
9 Name plate
10 Locknut

Control cover with manual pressure adjustment

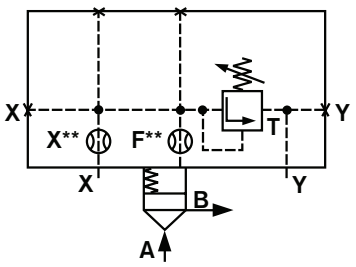

LFA...DB.-6X/...
NS 80, 100

Dimensions in mm (inches)

NS 80, 100

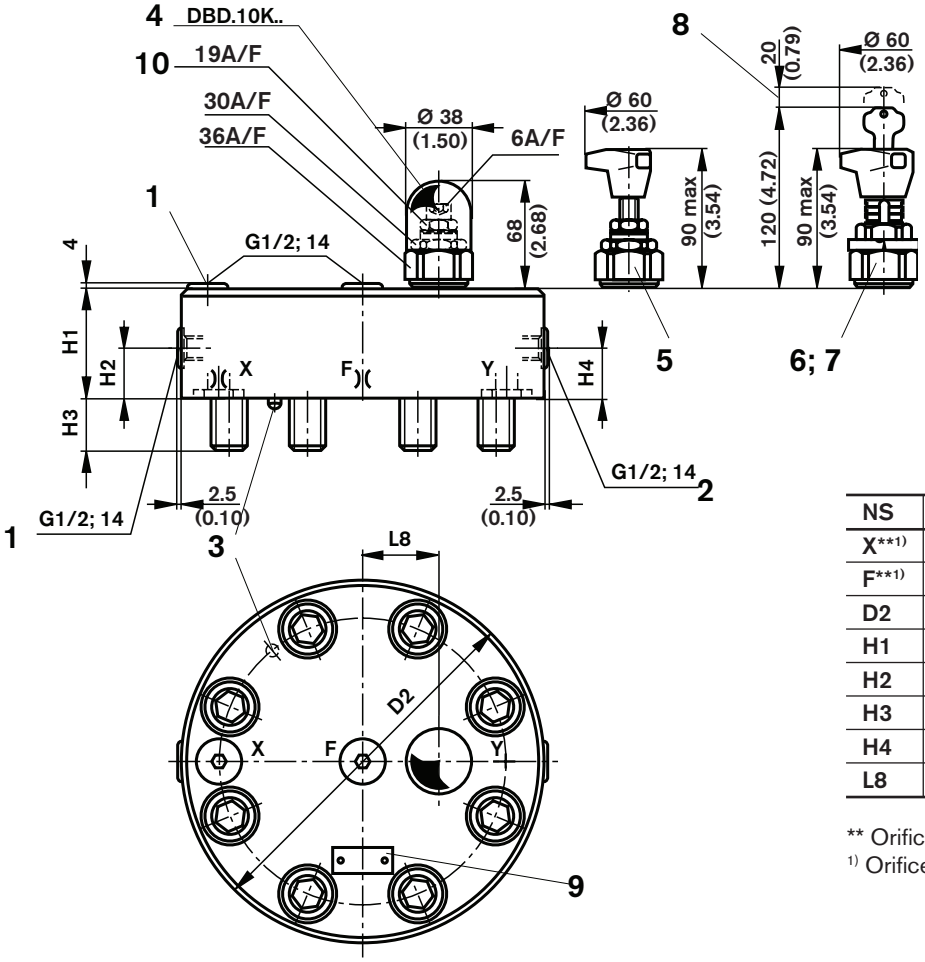

NS	80	100
X**[1)]	3.0 (0.12)	3.0 (0.12)
F**[1)]	1.2 (0.05)	1.5 (0.06)
D2	250 (9.84)	300 (11.81)
H1	100 (3.94)	100 (3.94)
H2	38 (1.50)	38 (1.50)
H3	45 (1.77)	51 (2.01)
H4	58 (2.28)	58 (2.28)
L8	50 (1.97)	50 (1.97)

** Orifice Ø
[1)] Orifice G 1/4 tapered

1 Port X optionally as a threaded port
2 Port Y optionally as a threaded port
3 Locating pin
4 Adjustment type “2”
5 Adjustment type “1”
6 Adjustment type “3”
7 Adjustment type “4”
8 Space required to remove the key
9 Name plate
10 Locknut

Control cover with manual pressure adjustment, for electrical unloading

NS 16 to 100

1	2	3	4	5	6	9	
LFA							

NS 16 = **16**
NS 25 = **25**
NS 32 = **32**
NS 40 = **40**
NS 50 = **50**
NS 63 = **63**
Series 7X

NS 80 = **80**
NS 100 = **100**
Series 6X

Control cover type

For mounting a directional spool (NS 16 to 100) or directional poppet valve (for NS 16, 25, 32) = **DBW**

For mounting a directional poppet valve (for NS 40, 50, 63, 80, 100) = **DBS**

Adjustment type

Rotary knobe = **1**

Hexagon with protective cap = **2**

Lockable rotary knob with scale (H-key to automotive industry standards) = **3**

Rotary knob with scale **not** lockable = **4**

12 = SAE threaded external connections and UNC mounting bolts

– = Metric threaded connections

No code = NBR seals

V = FKM seals

(other seals on request)

Attention!
The compatibility of the seals and pressure fluid has to be taken into account!

Pressure stages
(take max. perm. pressure of pilot valve into account)

NS 16, 25 ,32	NS 40, 50, 63, 80, 100
025 = 25 bar	**025** = 25 bar
050 = 50 bar	**050** = 50 bar
100 = 100 bar	**100** = 100 bar
200 = 200 bar	**200** = 200 bar
315 = 315 bar	**315** = 315 bar
420 = 420 bar	**400** = 400 bar

6X = Series 6X (NS 80 and 100)

7X = Series 7X (NS 16 to 63)

NS 16 to 63

4WE 6 D../..

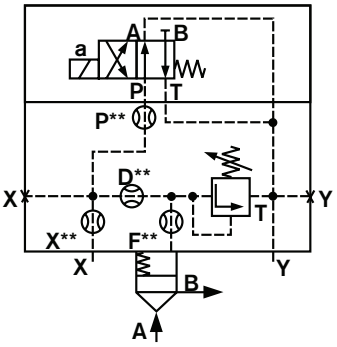

LFA..DBW.-7X/...
NS 16, 25, 32

3WE 6 B9-../..

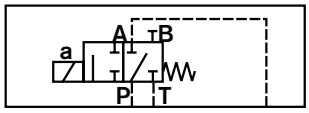

M-3SED 6 C../350…

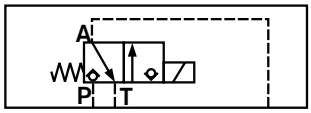

M-3SED 6 U../350…
M-3SEW 6 U../420…

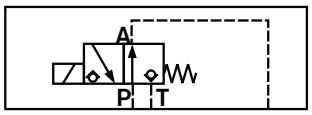

M-3SEW 6 C../420…

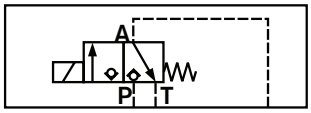

4WE 6 D../..

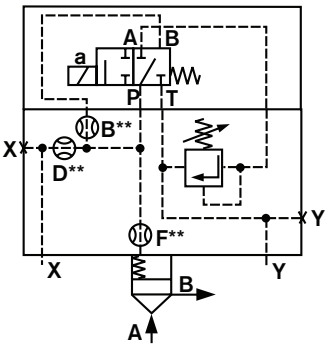

LFA..DBW.-7X/...
NS 40, 50, 63

3WE 6 B9-../..

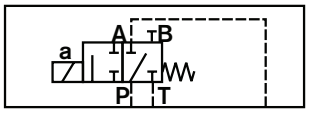

M-3SED 6 U../350…
M-3SEW 6 U../420…

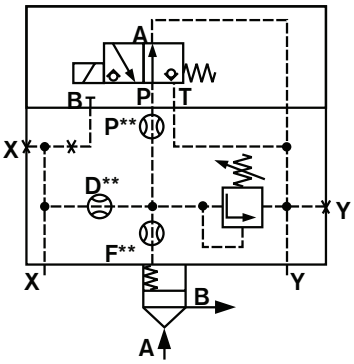

LFA..DBS.-7X/...
NS 40, 50, 63

M-3SED 6 C../350…

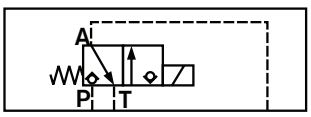

M-3SEW 6 C../420…

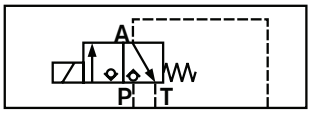

Control cover with manual pressure adjustment, for electrical unloading

NS 16, 25, 32

Dimensions in mm (inches)

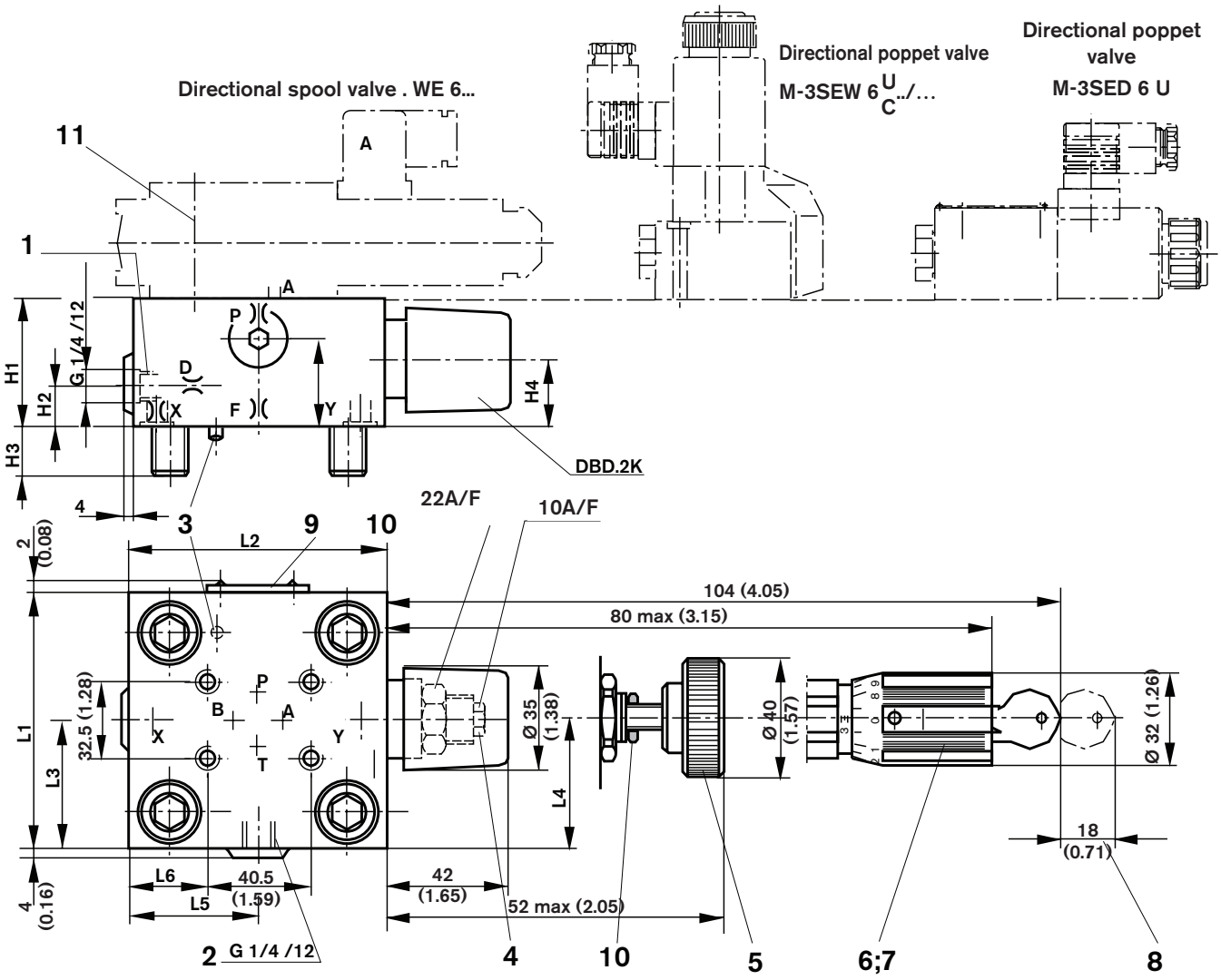

NS	P**[1)]	X**[1)]	F**[1)]	D**[1)]	H1	H2	H3	H4	H5	L1	L2	L3	L4	L5	L6	L7
16	1.0 (0.039)	0.8 (0.03)	1.0 (0.039)	0.8 (0.03)	40 (1.57)	17 (0.67)	15 (0.59)	19 (0.75)	28 (1.10)	65 (2.56)	80 (3.15)	36.5 (1.44)	32.5 (1.28)	35 (1.38)	7 (0.28)	17 (0.67)
25	1.0 (0.039)	0.8 (0.03)	1.0 (0.039)	0.8 (0.03)	40 (1.57)	19 (0.75)	24 (0.94)	19 (0.75)	28 (1.10)	85 (3.35)	85 (3.35)	49 (1.93)	45.5 (1.79)	36 (1.42)	8 (0.31)	27 (1.06)
32	1.0 (0.039)	1.0 (0.039)	1.2 (0.05)	1.0 (0.039)	50 (1.97)	26 (1.02)	28 (1.10)	26 (1.02)	37 (1.46)	100 (3.94)	100 (3.94)	56.5 (2.22)	53 (2.07)	57 (2.24)	31 (1.22)	34.5 (1.36)

** Orifice Ø

[1)] Orifice M6 tapered

1 Port X optionally as a threaded port

2 Port Y optionally as a threaded port

3 Locating pin

4 Adjustment type “2”

5 Adjustment type “1”

6 Adjustment type “3”

7 Adjustment type “4”

8 Space required to remove the key

9 Name plate

10 Locknut

11 Valve fixing screws are included within the control cover scopeof supply

Control cover with manual pressure adjustment, for electrical unloading

NS 40, 50

Dimensions in mm (inches)

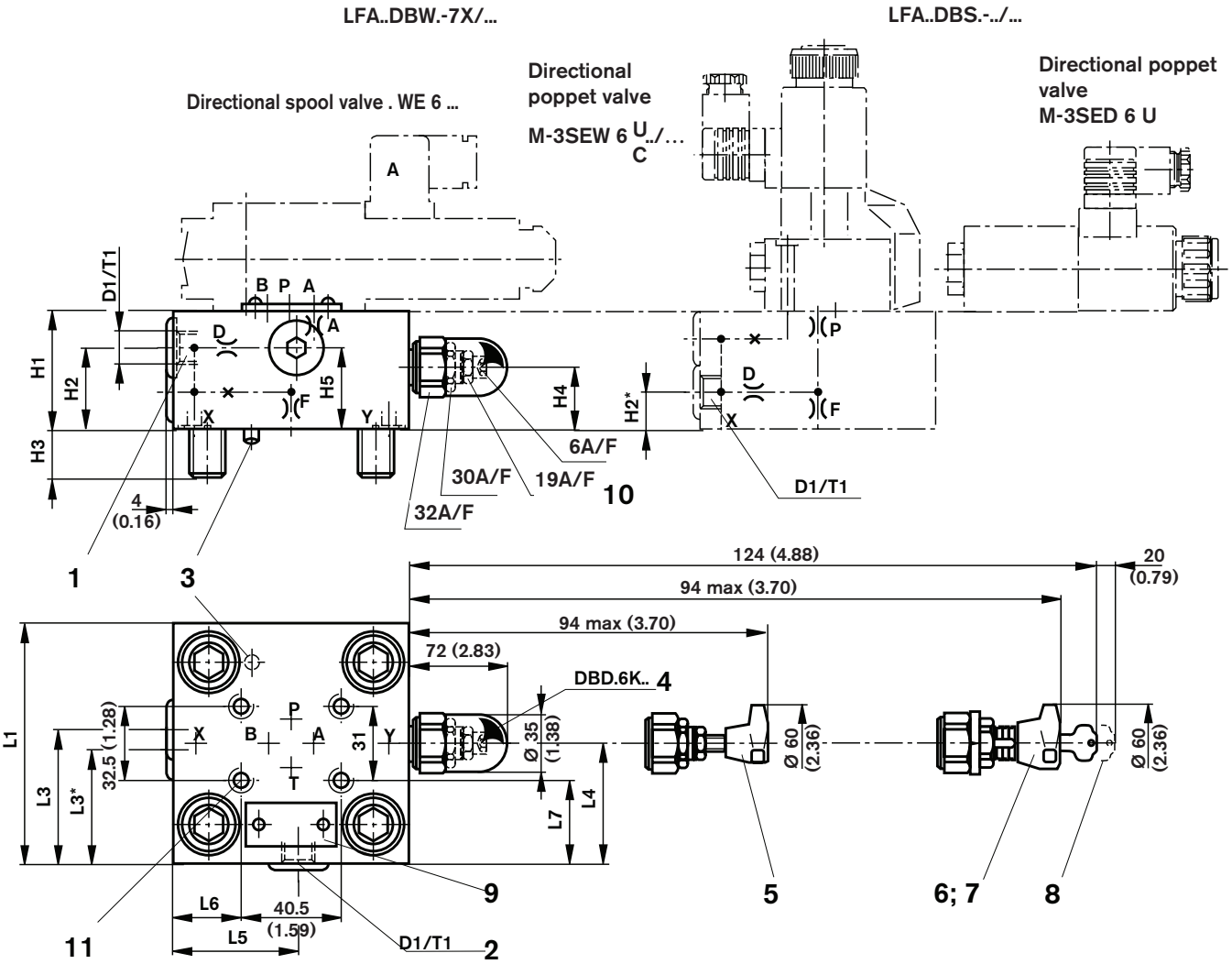

NS	A**[1)]	P**[1)]	F**[1)]	D**[1)]	D1	T1	H1	H2	H2*	H3	H4	H5	□L1	L3	L3*	L4	L5	L6	L7
40	0.8 (0.03)	1.2 (0.05)	1.2 (0.05)	1.0 (0.039)	G1/4 SAE4; 7/16-20)	12 (0.47)	60 (2.36)	46 (1.81)	17 (0.67)	32 (1.26)	27 (1.06)	40 (1.57)	125 (4.92)	62.5 (2.46)	69 (2.72)	76 (2.99)	68 (2.68)	43.5 (1.71)	47 (1.85)
50	0.8 (0.03)	1.5 (0.06)	1.5 (0.06)	2.0 (0.08)	G1/2 (SAE-8; 3/4-16)	14 (0.55)	68 (2.68)	51 (2.01)	19.5 (0.77)	34 (1.34)	35 (1.38)	50 (1.97)	140 (5.51)	67.5 (2.66)	80 (3.15)	84 (3.31)	74.5 (2.93)	51 (2.01)	54.5 (2.14)

* Dimensions for control cover LFA..DBS..
** Orifice Ø
[1)] Orifice M6 tapered

1 Port X optionally as a threaded port
2 Port Y optionally as a threaded port
3 Locating pin
4 Adjustment type “2”
5 Adjustment type”1”
6 Adjustment type “3”
7 Adjustment type “4”
8 Space required to remove the key
9 Name plate
10 Locknut
11 Valve fixing screws are included within the control cover scope of supply

Control cover with manual pressure adjustment, for electrical unloading

Dimensions in mm (inches)

NS 63

LFA..DBW.-7X/...

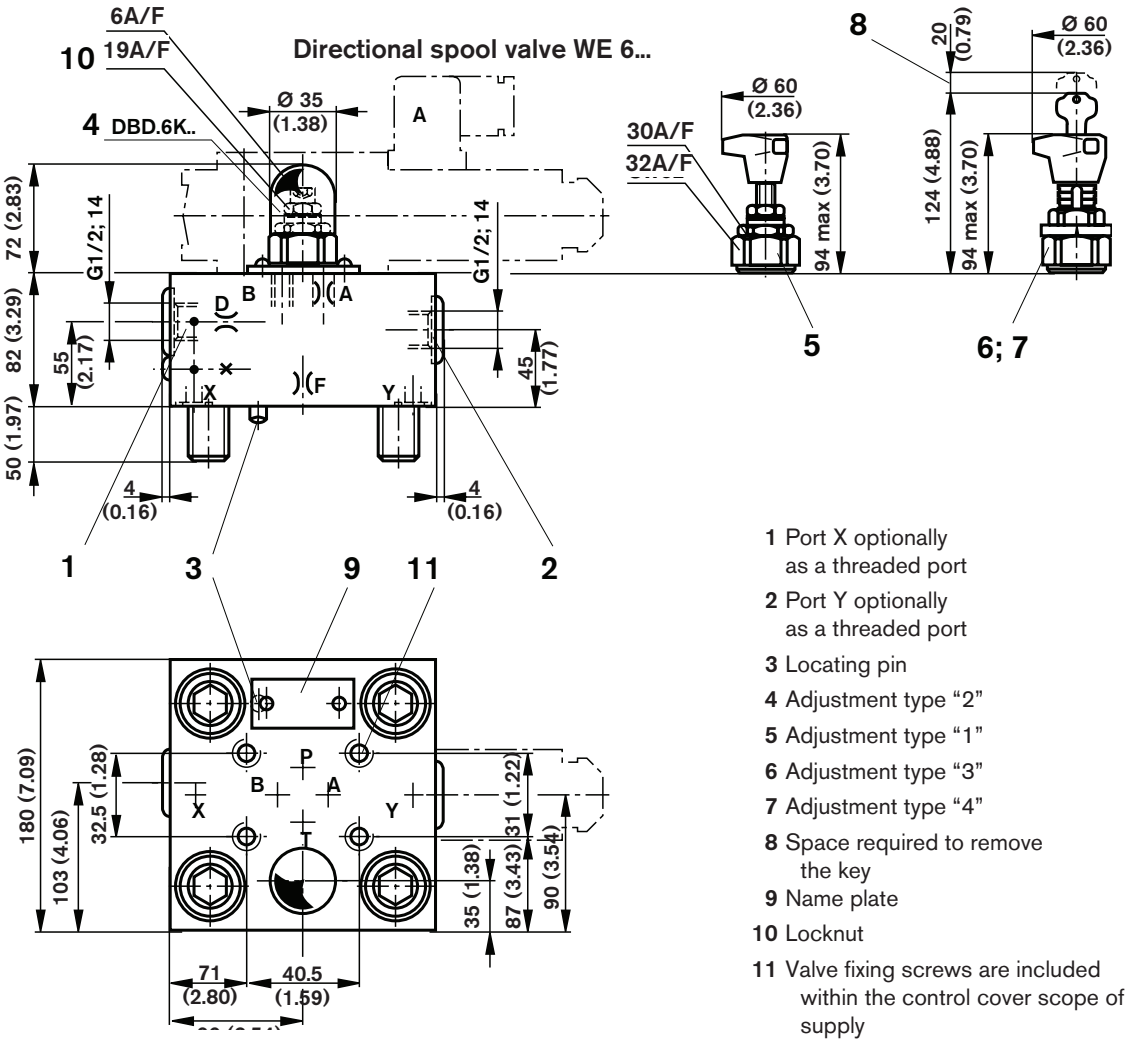

1 Port X optionally as a threaded port
2 Port Y optionally as a threaded port
3 Locating pin
4 Adjustment type “2”
5 Adjustment type “1”
6 Adjustment type “3”
7 Adjustment type “4”
8 Space required to remove the key
9 Name plate
10 Locknut
11 Valve fixing screws are included within the control cover scope of supply

LFA..DBS.-.../...

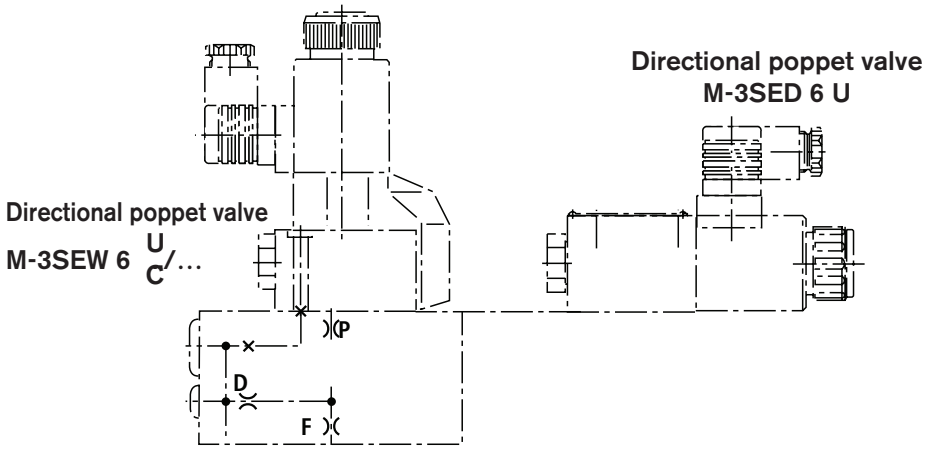

	A**[1)]	P**[1)]	F**[1)]	D**[1)]
DBW	1.0 (0.039)	–	2.0 (0.08)	2.5 (0.10)
DBS	–	1.8 (0.07)	2.0 (0.08)	2.0 (0.08)

** Orifice Ø
1) Orifice M6 tapered

Control cover with manual pressure adjustment, for electrical unloading

Dimensions in mm (inches)

NS 80, 100

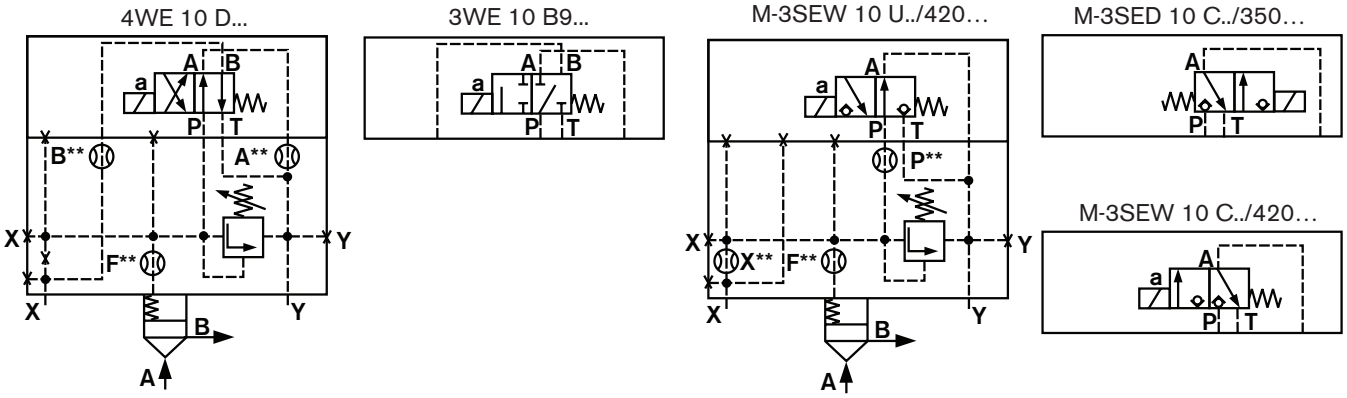

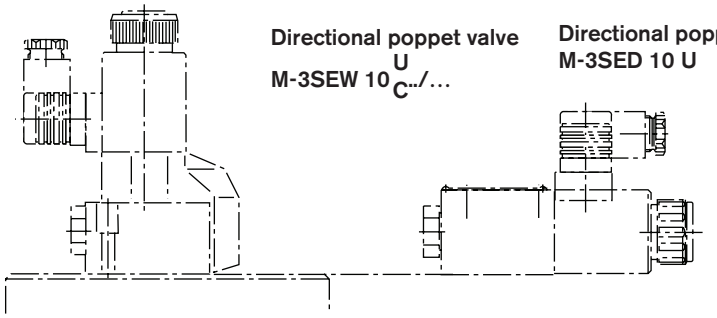

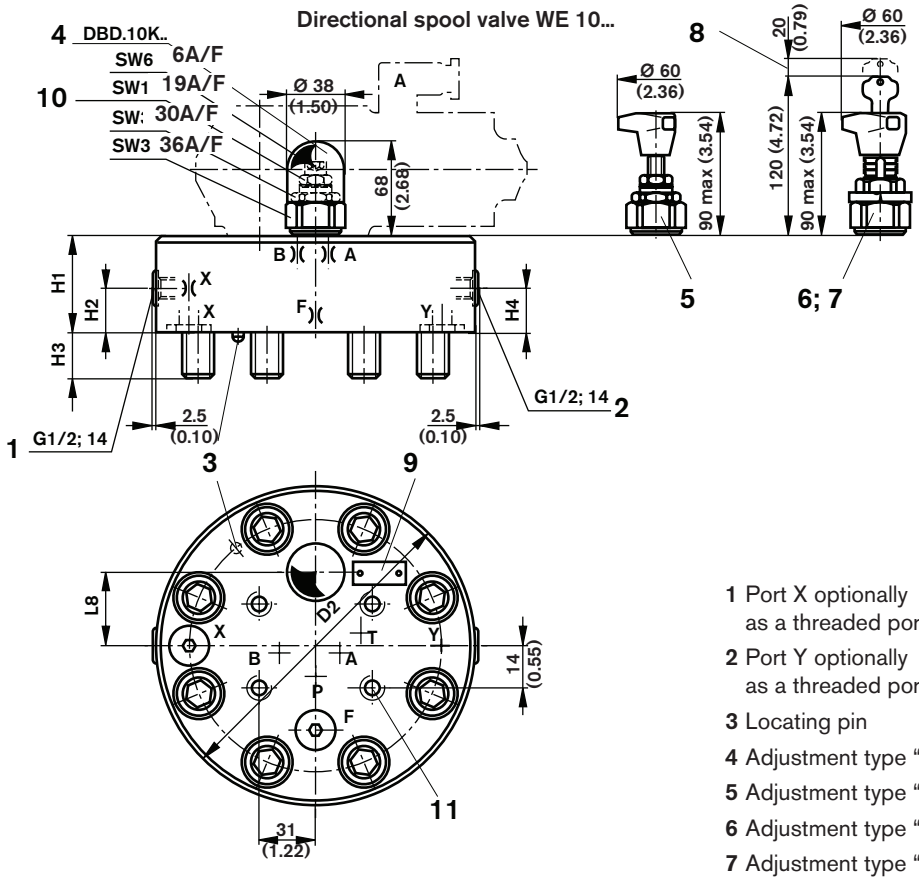

NS	80	100
A**[1)]	1.2 (0.05)	1.5 (0.06)
B**[1)]	3.0 (0.12)	3.0 (0.12)
P**[1)]	3.5 (0.14)	3.5 (0.14)
X**[2)]	3.0 (0.12)	3.0 (0.12)
F**2[1)]	2.5 (0.10)	2.5 (0.10)
D2	250 (9.84)	300 (11.81)
H1	100 (3.94)	100 (3.94)
H2	30 (1.18)	30 (1.18)
H3	45 (1.77)	51 (2.01)
H4	52 (2.05)	52 (2.05)
L8	75 (2.95)	85 (3.35)

** Orifice Ø
1) Orifice M8 x 1 tapered
2) Orifice G 1/4 tapered

1 Port X optionally as a threaded port
2 Port Y optionally as a threaded port
3 Locating pin
4 Adjustment type “2”
5 Adjustment type “1”
6 Adjustment type “3”
7 Adjustment type “4”
8 Space required to remove the key
9 Name plate
10 Locknut
11 Valve fixing screws are included within the control cover scope of supply

Control cover with manual pressure adjustment, for isolation functions

NS 16 to 100

1	2	3	4	5	6	9	
LFA		DBWD	–	/			

NS 16 = **16**
NS 25 = **25**
NS 32 = **32** (Series 7X)
NS 40 = **40**
NS 50 = **50**
NS 63 = **63**

NS 80 = **80** (Series 6X)
NS 100 = **100**

Adjustment type

Rotary knob	= **1**
Hexagon with protective cap	= **2**
Lockable rotary knob with scale (H-key to automotive industry standard)	= **3**
Rotary knob with scale **not** lockable	= **4**

Series 6X (NS 80 and 100)	= **6X**
Series 7X (NS 16 to 63)	= **7X**

12 = SAE threaded external connections and UNC mounting bolts
– = Metric threaded connections

No code = NBR seals
V = FKM seals
(other seals on request)

Attention!
The compatibility of the seals and pressure fluid has to be taken into account!

Pressure stages
(take max. perm. pressure of pilot valve into account)

NS 16, 25 ,32	NS 40, 50, 63, 80, 100
025 = 25 bar	**025** = 25 bar
050 = 50 bar	**050** = 50 bar
100 = 100 bar	**100** = 100 bar
200 = 200 bar	**200** = 200 bar
315 = 315 bar	**315** = 315 bar
420 = 420 bar	**400** = 400 bar

3 WE 6 A../...

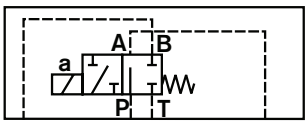

4 WE 6 M../...

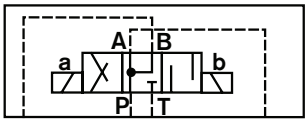

3 WE 6 B9-../...

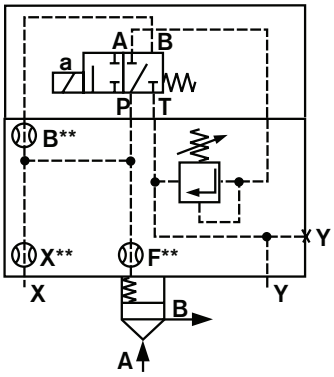

LFA..DBWD.-7X/...
NS 16

3 WE 6 B9-../...

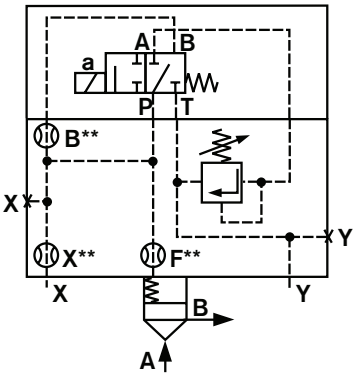

LFA..DBWD.-7X/...
NS 25, 32

3 WE 6 B9-../...

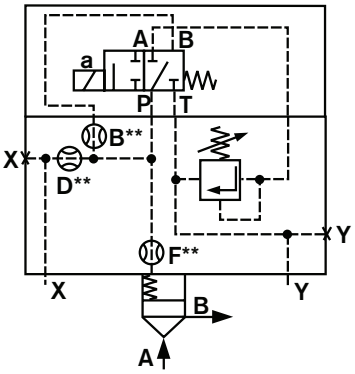

LFA..DBWD.-7X/...
NS 40, 50, 63

3 WE 10 A...

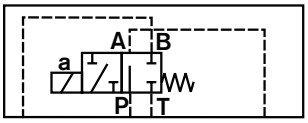

4 WE 10 M...

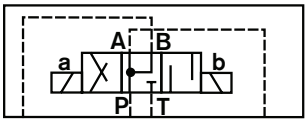

3 WE 10 B9...

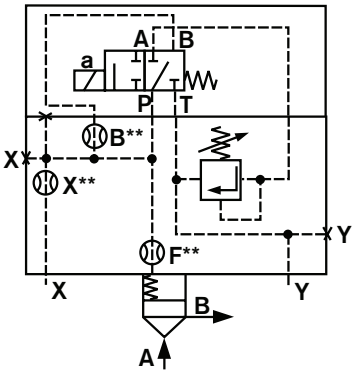

LFA..DBWD.-6X/...
NS 80, 100

Control cover with manual pressure adjustment, for isolation functions

Dimensions in mm (inches)

NS 16, 25, 32

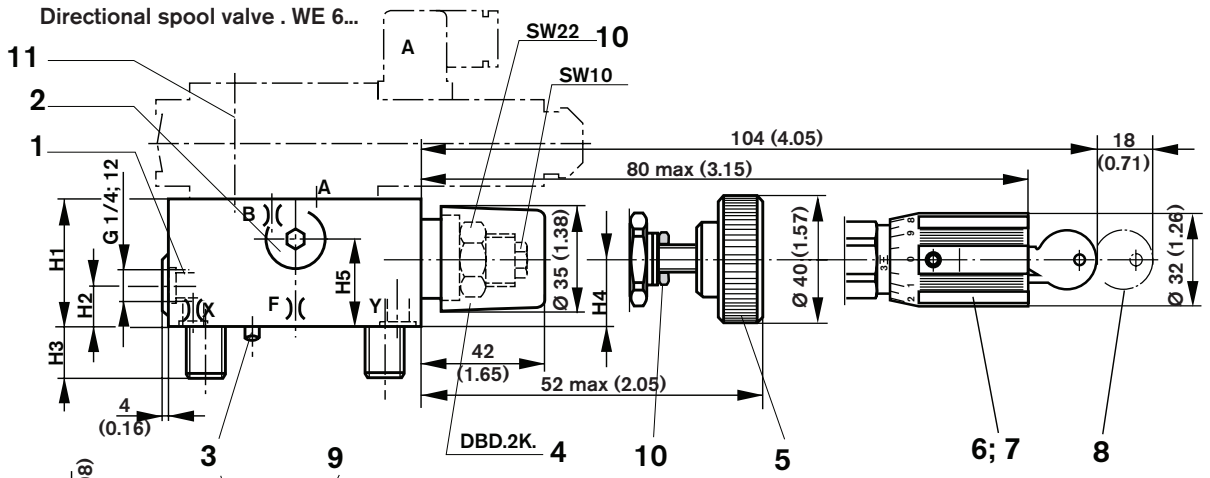

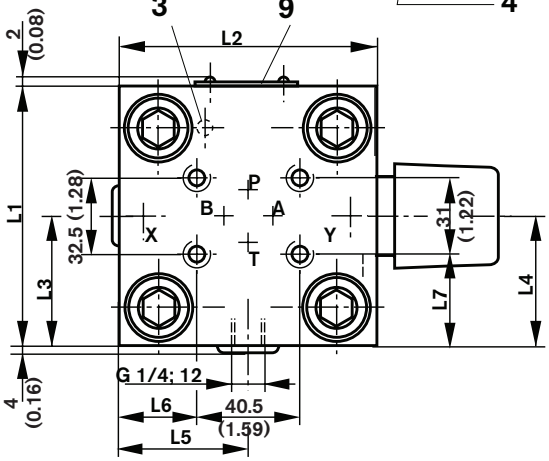

NS 40, 50

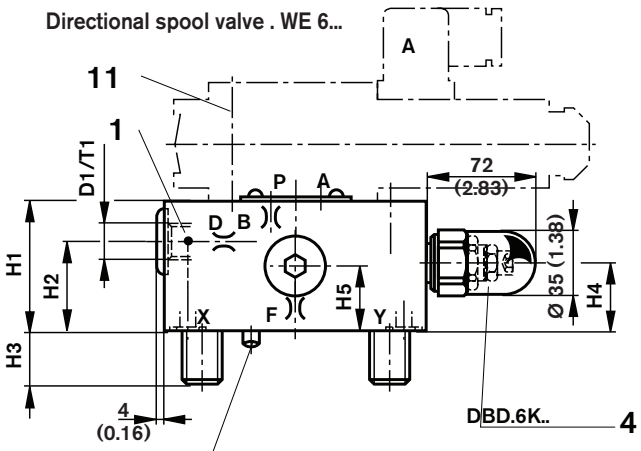

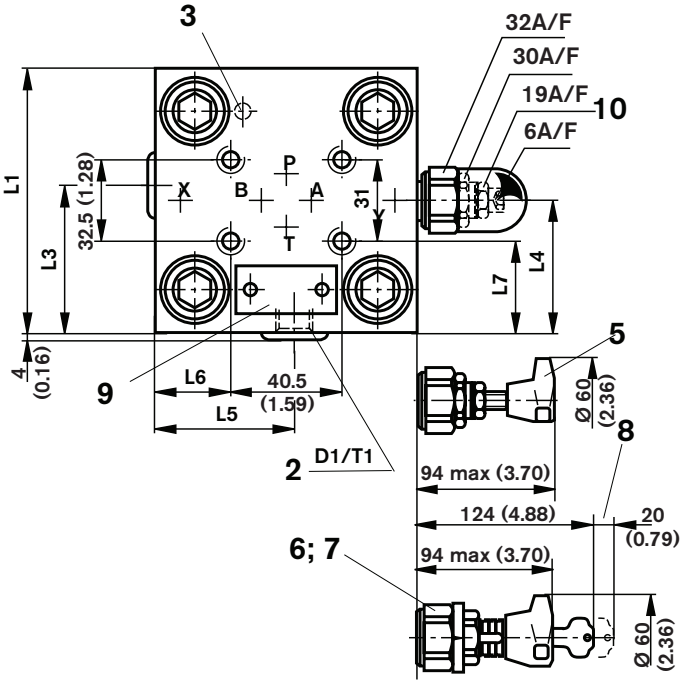

1 Port X optionally as a threaded port
2 Port Y optionally as a threaded port
3 Locating pin
4 Adjustment type “2”
5 Adjustment type “1”
6 Adjustment type “3”
7 Adjustment type “4”
8 Space required to remove the key
9 Name plate
10 Locknut
11 Valve fixing screws are included within the control cover scope of supply

For dimension table see page 28

Control cover with manual pressure adjustment, for isolation functions

Dimensions in mm (inches)

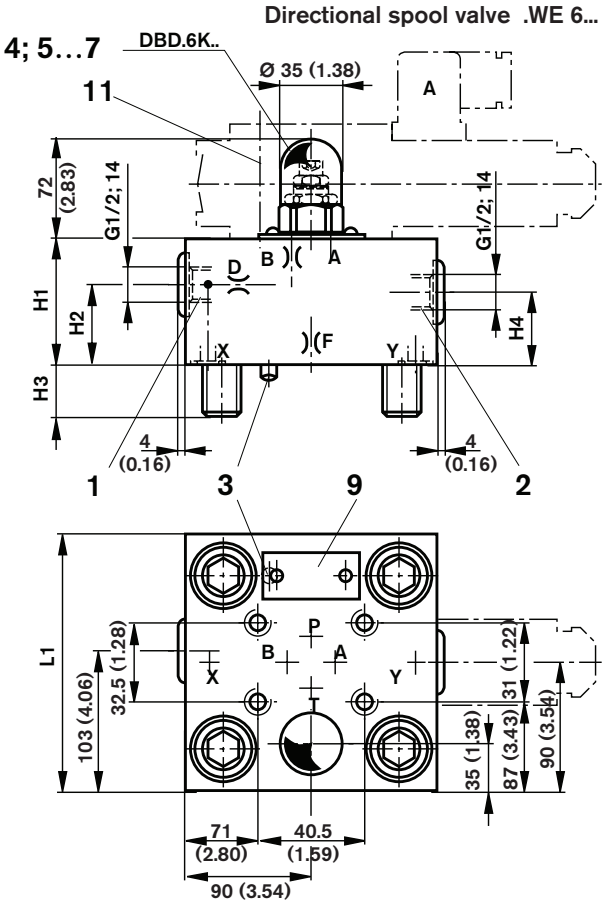

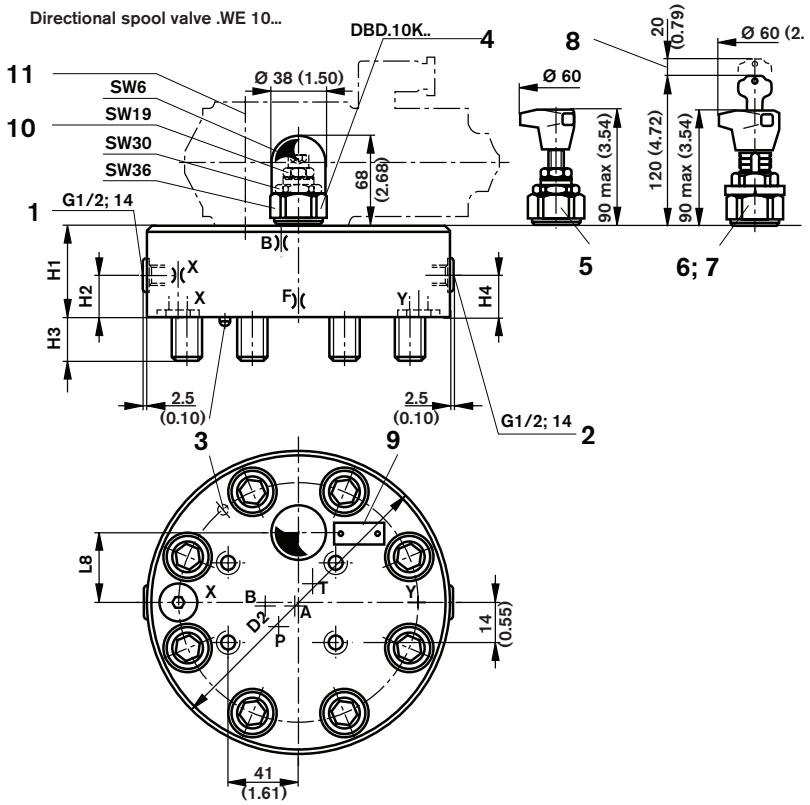

1 Port X optionally as a threaded port
2 Port Y optionally as a threaded port
3 Locating pin
4 Adjustment type “2”
5 Adjustment type “1”
6 Adjustment type “3”
7 Adjustment type “4”
8 Space required to remove the key
9 Name plate
10 Locknut
11 Valve fixing screws are included within the control cover scope of supply

NS	B**1)	X**1)	F**1)	D**1)	D1	D2	H1	H2	H3	H4	H5	L1	□L1	L2	L3	L4	L5	L6	L7	L8	T1
16	1.0 (0.039)	0.8 (0.03)	1.0 (0.039)	–	–	–	40 (1.57)	–	15 (0.59)	19 (0.75)	28 (1.10)	65 (2.56)	–	80 (3.15)	–	32.5 (1.28)	35 (1.38)	7 (0.28)	17 (0.67)	–	–
25	1.0 (0.039)	0.8 (0.03)	1.0 (0.039)	–	–	–	40 (1.57)	19 (0.75)	24 (0.94)	19 (0.75)	28 (1.10)	85 (3.35)	–	85 (3.35)	49 (1.93)	45.5 (1.79)	36 (1.42)	8 (0.31)	27 (1.06)	–	–
32	1.0 (0.039)	1.0 (0.039)	1.2 (0.05)	–	–	–	50 (1.97)	26 (1.02)	28 (1.10)	26 (1.02)	37 (1.46)	100 (3.94)	–	100 (3.94)	56.5 (2.22)	53 (2.07)	57 (2.24)	31 (1.22)	34.5 (1.36)	–	–
40	1.2 (0.05)	–	1.2 (0.05)	1.0 (0.039)	G1/4	–	60 (2.36)	46 (1.81)	32 (1.26)	27 (1.06)	16 (0.63)	–	125 (4.92)	–	62.5 (2.46)	76 (2.99)	68 (2.68)	43.5 (1.71)	47 (1.85)	–	12 (0.47)
50	1.5 (0.06)	–	1.5 (0.06)	2.0 (0.08)	G1/2	–	68 (2.68)	50 (1.97)	34 (1.34)	35 (1.38)	20 (0.79)	–	140 (5.51)	–	70 (2.76)	84 (3.31)	75 (2.95)	51 (2.01)	54.5 (2.15)	–	14 (0.55)
63	1.8 (0.07)	–	2.0 (0.08)	2.5 (0.10)	–	–	82 (3.29)	55 (2.17)	50 (1.97)	45 (1.77)	–	–	180 (7.09)	–	–	–	–	–	–	–	–
80	3.5 (0.14)	3.0 (0.12)	2.5 (0.10)	–	–	250 (9.94)	100 (3.94)	67 (2.64)	45 (1.77)	58 (2.28)	–	–	–	–	–	–	–	–	–	75 (2.95)	–
100	3.5 (0.14)	3.0 (0.12)	2.5 (0.10)	–	–	300 (11.81)	100 (3.94)	67 (2.64)	51 (2.01)	58 (2.28)	–	–	–	–	–	–	–	–	–	85 (3.35)	–

** Orifice Ø
1) Orifice M6 tapered (NS 16...63) or M8 x 1 tapered (NS 80 and 100)
2) Orifice M6 tapered (NS 16...63) or G 1/4 tapered (NS 80 and 100)

Control cover with 2 manual pressure adjusters, electrically selectable

1	2	3	4	5	6	7	9	
LFA						A...		

NS 16 to 100

NS 16, NS 25, NS 32, NS 40, NS 50, NS 63, NS 80 — Series 7X = **16** / = **25** / = **32** / = **40** / = **50** / = **63**

NS 100 — Series 6X = **80** / = **100**

Control cover type

De-energised – DB1 (4 WE.. D)
De-energised – open (4 WE.. H) = **DBU2A**

De-energised – DB max. (4 WE.. D) (see symbols) = **DBU2B**

Adjustment type (details only required for DB1)

Rotary knob	= **1**
Hexagon with protective cap	= **2**
Lockable rotary knob with scale (H-key to automotive industry standards)	= **3**
Rotary knob with scale **not** lockable	= **4**

DB max. DB1

12 = SAE threaded external connections and UNC mounting bolts
– = Metric threaded connections

No code = NBR seals
V = FKM seals
(other seals on request)

Attention!
The compatibility of the seals and pressure fluid has to be taken into account!

Pressure stages
(take max. perm. pressure of pilot valve into account)

NS 16, 25 ,32	NS 40, 50, 63, 80, 100
025 = 25 bar	**025** = 25 bar
050 = 50 bar	**050** = 50 bar
100 = 100 bar	**100** = 100 bar
200 = 200 bar	**200** = 200 bar
315 = 315 bar	**315** = 315 bar
420 = 420 bar	**400** = 400 bar

6X = Series 6X (NS 80 and 100)
7X = Series 7X (NS 16 to 63)

4 WE 6 H../...

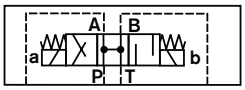

4 WE 6 H../...

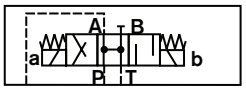

4 WE 6 D../...

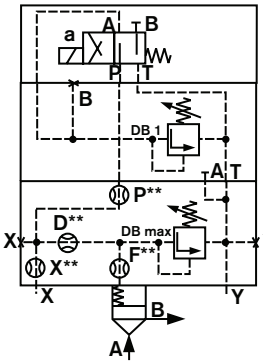

LFA..DBU2A.-7X...
NS 16, 25, 32

4 WE 6 D../...

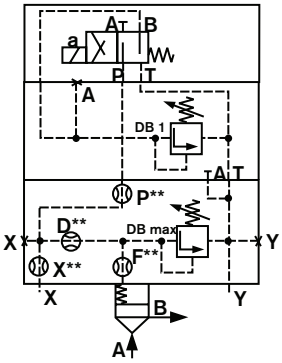

LFA..DBU2B.-7X/...
NS 16, 25, 32

4 WE 6 D../...

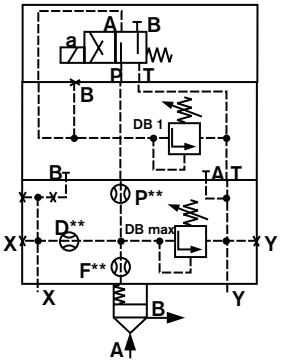

LFA..DBU2A.-7X/...
NS 40, 50, 63

4 WE 6 D../...

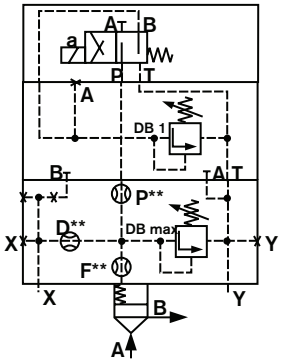

LFA..DBU2B.-7X/...
NS 40, 50, 63

4 WE 10

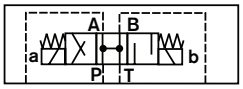

4 WE 10 D../...

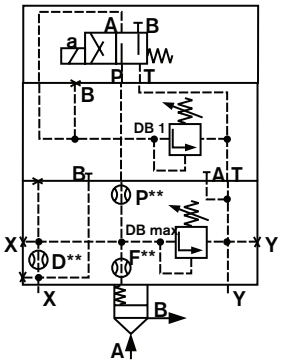

LFA...DBU2A.-6X/...
NS 80, 100

4 WE 10 D../...

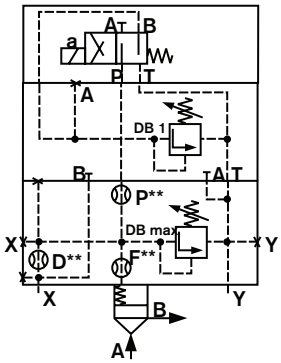

LFA...DBU2B.-6X/...
NS 80, 100

Control cover with 2 manual pressure adjusters, electrically selectable

Dimensions in mm (inches)

NS 16, 25, 32

Directional spool valve 4 WE 6...

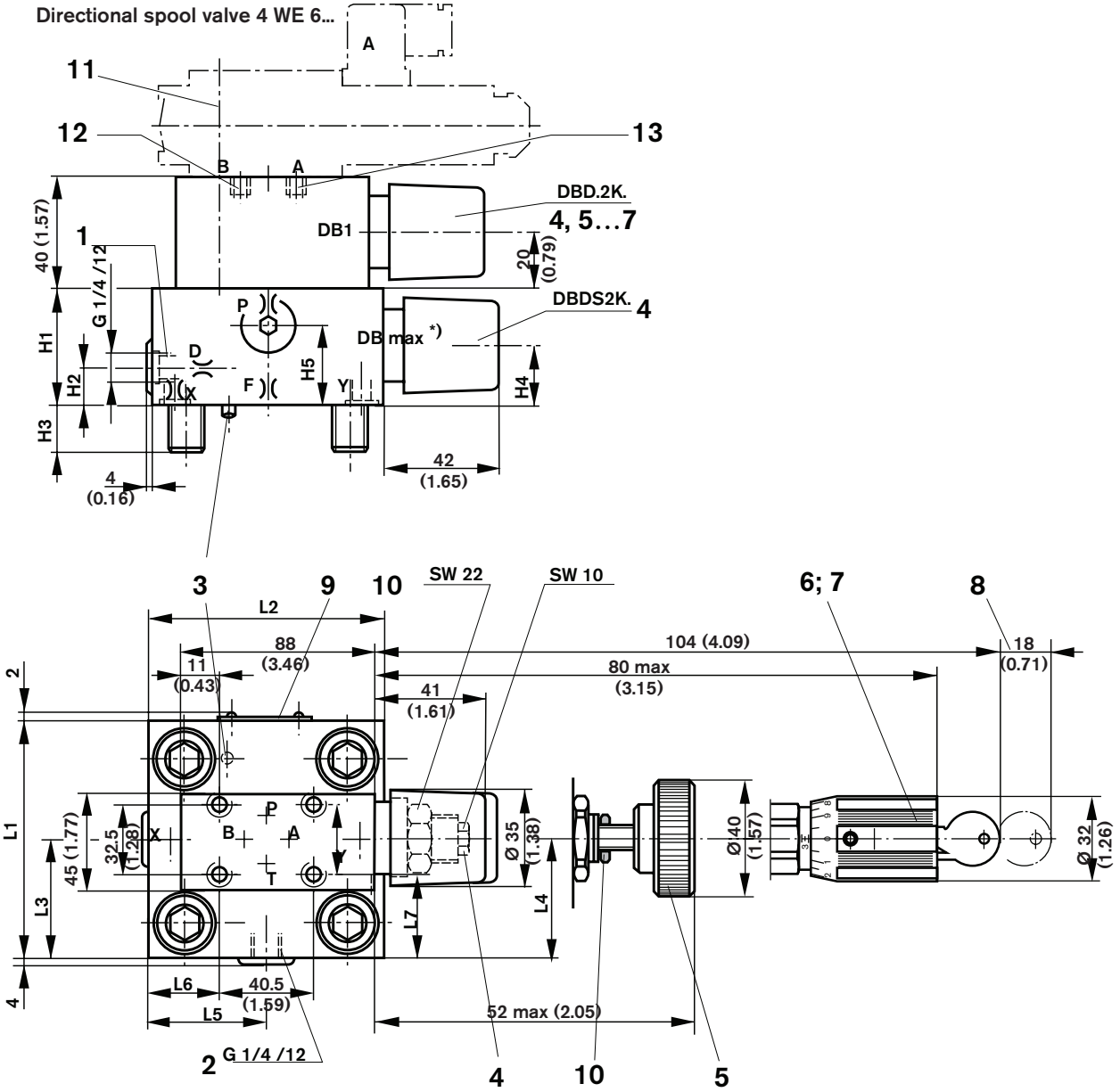

NS	P**1)	X**1)	F**1)	D**1)	H1	H2	H3	H4	H5	L1	L2	L3	L4	L5	L6	L7
16	1.0 (0.039)	0.8 (0.03)	1.0 (0.039)	0.8 (0.03)	40 (1.57)	17 (0.67)	15 (0.59)	19 (0.75)	28 (1.10)	65 (2.56)	80 (3.15)	36.5 (1.44)	32.5 (1.28)	35 (1.38)	7 (0.28)	17 (0.67)
25	1.0 (0.039)	0.8 (0.03)	1.0 (0.039)	0.8 (0.03)	40 (1.57)	19 (0.75)	24 (0.94)	19 (0.75)	28 (1.10)	85 (3.35)	85 (3.35)	49 (1.93)	45.5 (1.79)	36 (1.42)	8 (0.31)	27 (1.06)
32	1.0 (0.039)	1.0 (0.039)	1.2 (0.05)	1.0 (0.039)	50 (1.97)	26 (1.02)	28 (1.10)	26 (1.02)	37 (1.46)	100 (3.94)	100 (3.94)	56.5 (2.22)	53 (2.07)	57 (2.24)	31 (1.22)	34.5 (1.36)

** Orifice Ø

1) Orifice M6 tapered

1 Port X optionally as a threaded port

2 Port Y optionally as a threaded port

3 Locating pin

4 Adjustment type “2”

5 Adjustment type “1”

6 Adjustment type “3”

7 Adjustment type “4”

8 Space required to remove the key

9 Name plate

10 Locknut

11 Valve fixing screws M5 x 90 are included within the scope of the control cover supply

12 Plug M6 tapered for ..DBU 2A..

13 Plug M6 tapered for ..DBU 2B..

*) For DB max. only adjustment type “2” is possible

Control cover with 2 manual pressure adjusters, electrically selectable

Dimensions in mm (inches)

NS 40, 50

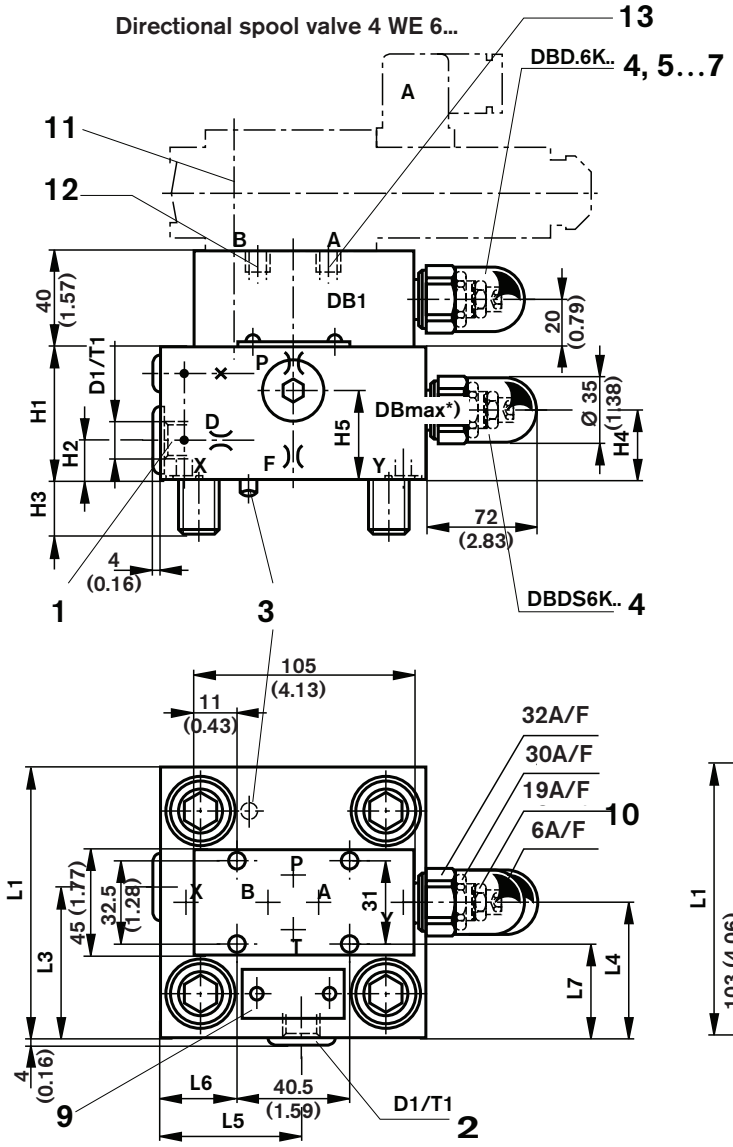

NS 63

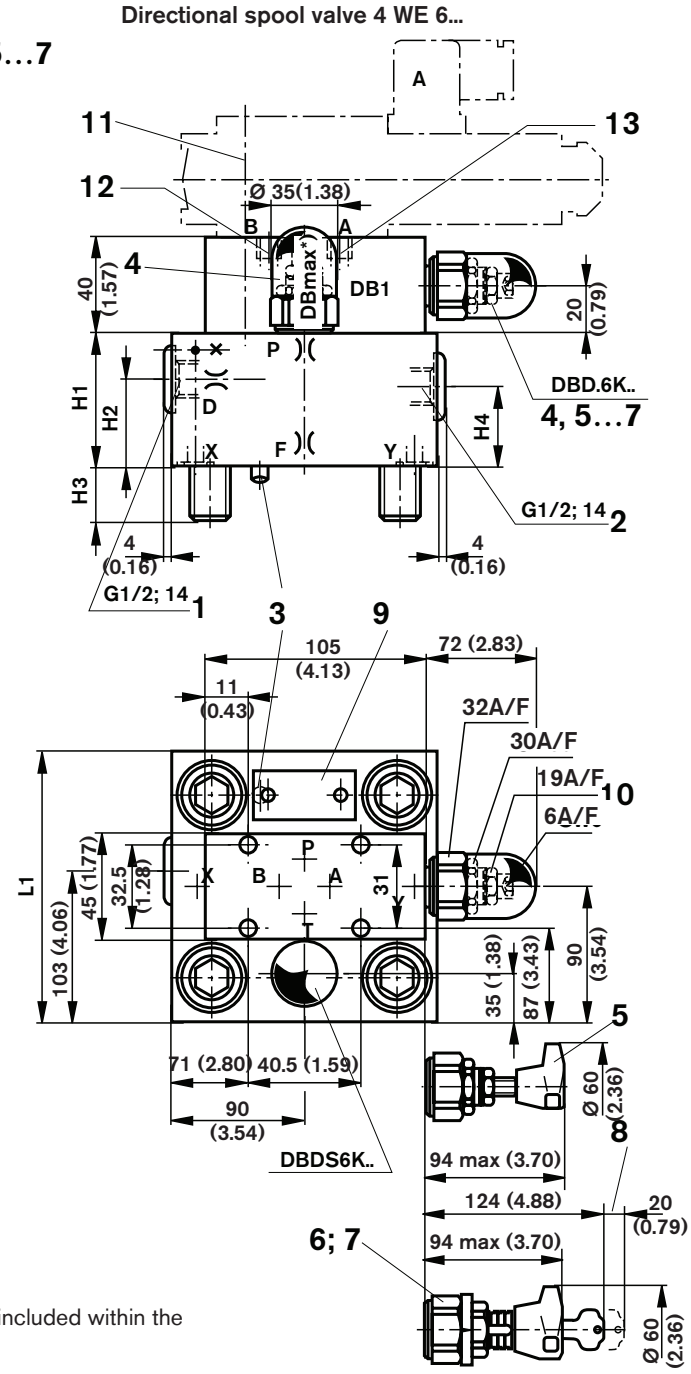

1 Port X optionally as a threaded port
2 Port Y optionally as a threaded port
3 Locating pin
4 Adjustment type "2"
5 Adjustment type "1"
6 Adjustment type "3"
7 Adjustment type "4"
8 Space required to remove the key
9 Name plate
10 Locknut
11 Valve fixing screws M5 x 90 are included within the control cover scope
12 Plug M6 tapered for ..DBU 2A..
13 Plug M6 tapered for ..DBU 2B..
*) For DB max. only adjustment type "2" is possible

** Orifice Ø
1) Orifice M6 tapered

NS	P**1)	F**1)	D**1)	D1	H1	H2	H3	H4	H5	□L1	L3	L4	L5	L6	L7	T1
40	1.2 (0.05)	1.2 (0.05)	1.0 (0.039)	G1/4 (SAE-4; 7/16-20)	60 (2.36)	17 (0.67)	32 (1.26)	27 (1.06)	40 (1.57)	125 (4.92)	69 (2.72)	76 (2.99)	68 (2.68)	43.5 (1.71)	47 (1.85)	12 (0.47)
50	1.5 (0.06)	1.5 (0.06)	2.0 (0.08)	G1/2 (SAE-8; 3/4-16)	68 (2.68)	19.5 (0.77)	34 (1.34)	35 (1.38)	50 (1.97)	140 (5.51)	80 (3.15)	84 (3.31)	74.5 (2.93)	51 (2.01)	54.5 (2.15)	14 (0.55)
63	2.5 (0.10)	2.0 (0.08)	2.5 (0.10)	–	82 (3.29	55 (2.17)	50 (1.97)	45 (1.77)	–	180 (7.09)	–	–	–	–	–	–

Control cover with 2 manual pressure adjusters, electrically selectable

NS 80, 100

Dimensions in mm (inches)

Directional spool valve 4 WE 10...

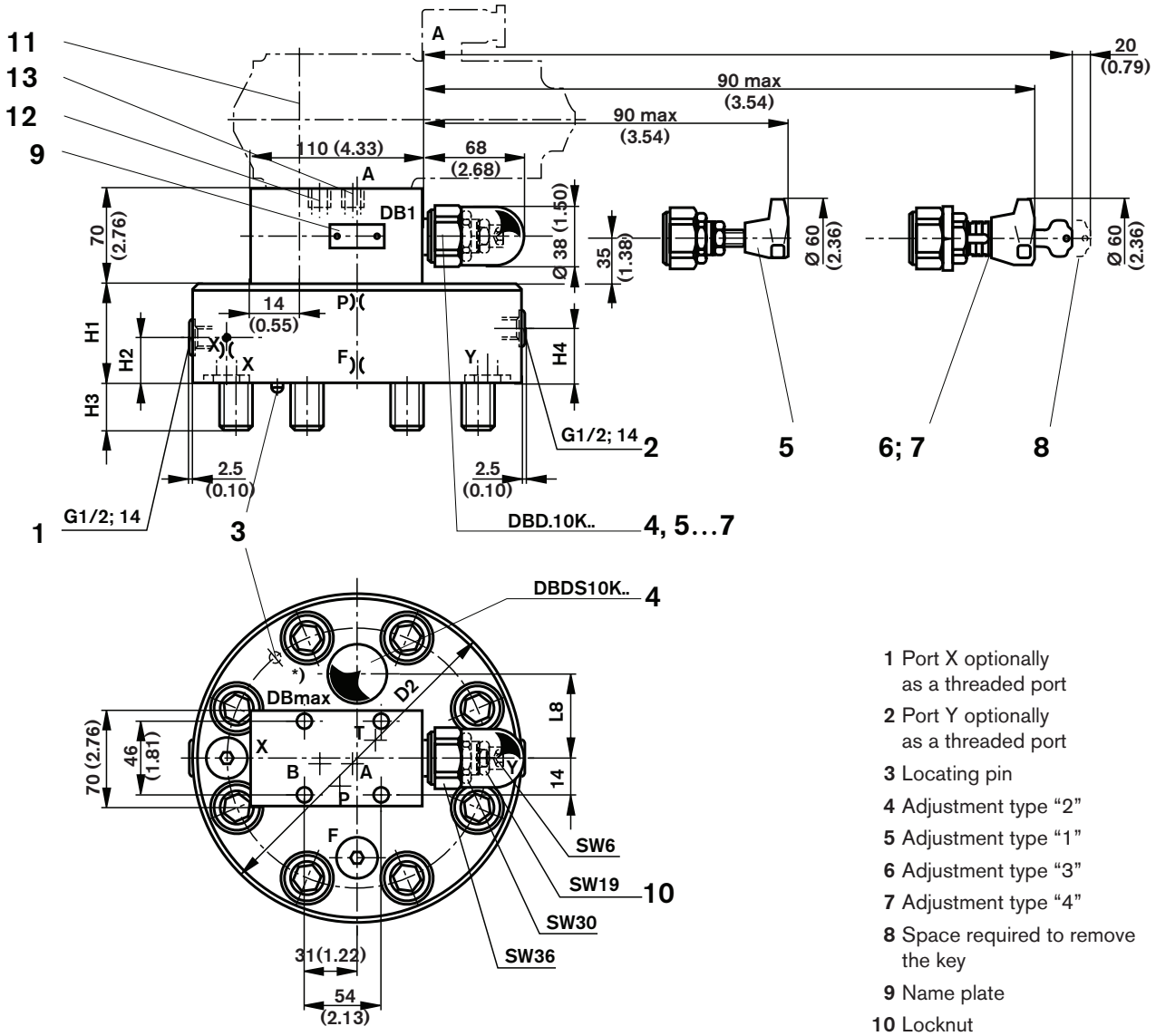

1 Port X optionally as a threaded port

2 Port Y optionally as a threaded port

3 Locating pin

4 Adjustment type “2”

5 Adjustment type “1”

6 Adjustment type “3”

7 Adjustment type “4”

8 Space required to remove the key

9 Name plate

10 Locknut

11 Valve fixing screws are included within the control cover scope of supply

12 Plug M8 x 1 tapered for ...DBU2A...

13 Plug M8 x 1 tapered for ...DBU2B...

*) For DB max. only adjustment type “2” is possible

NS	P**[1]	X**[2]	F**[2]	D2	H1	H2	H3	H4	L8
80	3.5 (0.14)	3.0 (0.12)	2.5 (0.10)	250 (9.84)	100 (3.94)	30 (1.18)	45 (1.77)	52 (2.05)	75 (2.95)
100	3.5 (0.14)	3.0 (0.12)	2.5 (0.10)	300 (11.81)	100 (3.94)	30 (1.18)	51 (2.01)	52 (2.05)	85 (3.35)

** Orifice Ø

[1] Orifice M8 x1 tapered

[2] Orifice G 1/4 tapered

Control cover with 3 manual manual pressure adjusters, electrically selectable

NS 16 to 100

1	2	3	4	5	6	7	8	9	
LFA		DBU3D		/		A...	B...		

Nom. size 16 = **16**
Nom. size 25 = **25**
Nom. size 32 = **32**
Nom. size 40 = **40**
Nom. size 50 = **50**
Nom. size 63 = **63**
Series 7X

Nom. size 80 = **80**
Nom. size 100 = **100**
Series 6X

Adjustment type (details only for DB1or DB2)*)

Rotary knob = **1**
Hexagon with protective cap = **2**
Lockable rotary knob with scale = **3**
(H-key to automotive industry standards)
Rotary knob with scale **not** lockable = **4**

Series 6X (NS 80 and 100) = **6X**
Series 7X (NS 16 to 63) = **7X**

*) For DB1 and DB2 select the same adjustment type

DB max
DB2
DB1

12 = SAE threaded external connections and UNC mounting bolts
– = Metric threaded connections

No code = NBR seals
V = FKM seals
(other seals on request)

Attention!
The compatibility of the seals and pressure fluid has to be taken into account!

Pressure stages
(take max. perm. pressure of pilot valve into account)

NS 16, 25 ,32	NS 40, 50, 63, 80, 100
025 = 25 bar	**025** = 25 bar
050 = 50 bar	**050** = 50 bar
100 = 100 bar	**100** = 100 bar
200 = 200 bar	**200** = 200 bar
315 = 315 bar	**315** = 315 bar
420 = 420 bar	**400** = 400 bar

4WE 6 H .. /...

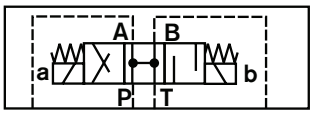

4WE 6 H .. /...

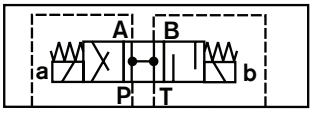

4WE 10 H.. /...

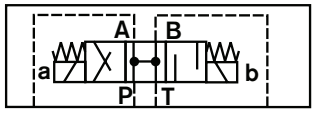

4WE 6 E .. /...

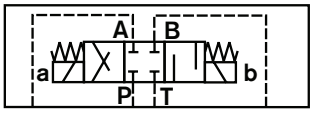

4WE 6 E .. /...

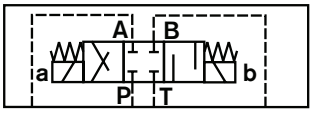

4WE 10 E.. /...

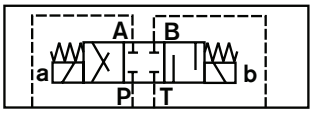

4WE 6 D .. /...

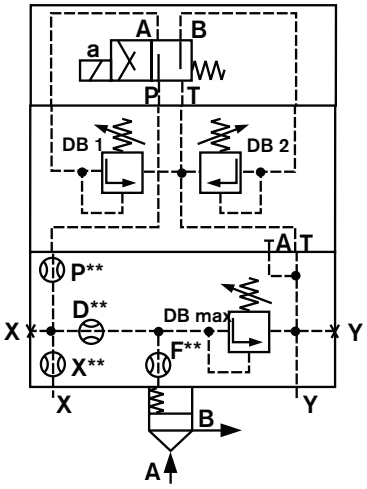

LFA..DBU3D.-7X/...
NS 16, 25, 32

4WE 6 D .. /...

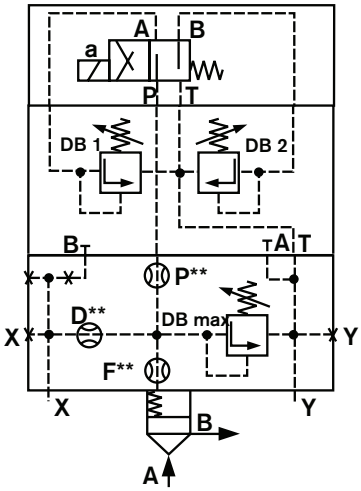

LFA..DBU3D.-7X/...
NS 40, 50, 63

4WE 10 D.. /...

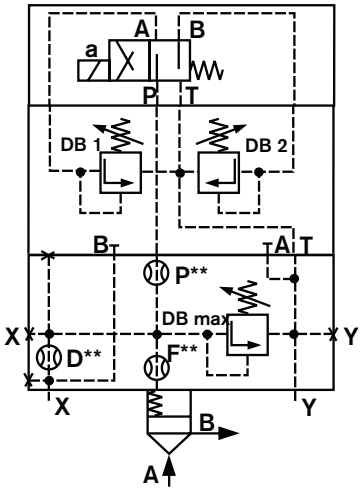

LFA...DBU3D.-6X/...
NS 80, 100

Control cover with 3 manual pressure adjusters, electrically selectable

Dimensions in mm (inches)

NS 16, 25, 32

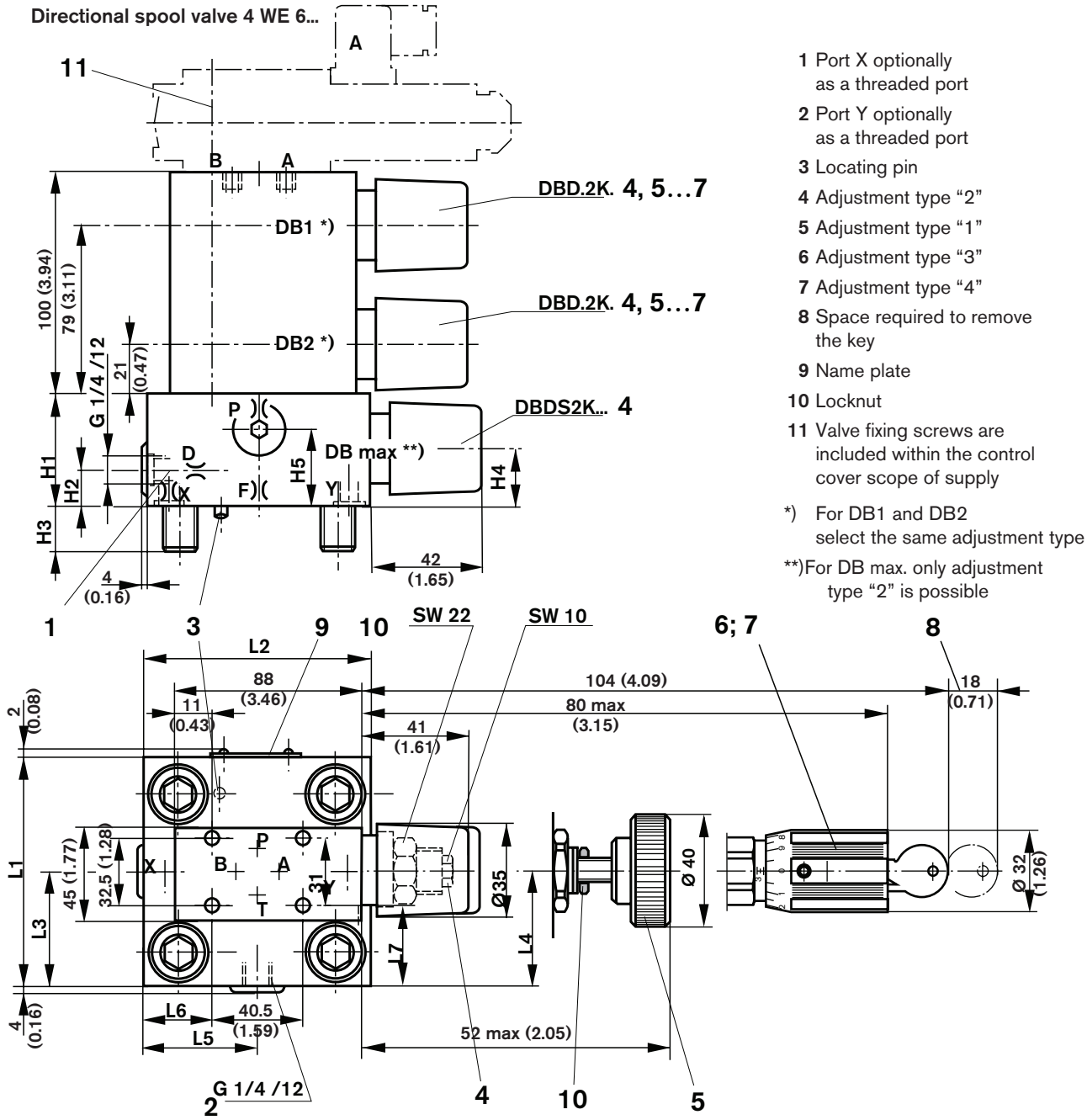

1 Port X optionally as a threaded port
2 Port Y optionally as a threaded port
3 Locating pin
4 Adjustment type “2”
5 Adjustment type “1”
6 Adjustment type “3”
7 Adjustment type “4”
8 Space required to remove the key
9 Name plate
10 Locknut
11 Valve fixing screws are included within the control cover scope of supply

*) For DB1 and DB2 select the same adjustment type

**)For DB max. only adjustment type “2” is possible

NS	P**[1)]	X**[1)]	F**[1)]	D**[1)]	H1	H2	H3	H4	H5	L1	L2	L3	L4	L5	L6	L7
16	1.0 (0.039)	0.8 (0.03)	1.0 (0.039)	0.8 (0.03)	40 (1.57)	17 (0.67)	15 (0.59)	19 (0.75)	28 (1.10)	65 (2.56)	80 (3.15)	36.5 (1.44)	32.5 (1.28)	35 (1.38)	7 (0.28)	17 (0.67)
25	1.0 (0.039)	0.8 (0.03)	1.0 (0.039)	0.8 (0.03)	40 (1.57)	19 (0.75)	24 (0.94)	19 (0.75)	28 (1.10)	85 (3.35)	85 (3.35)	49 (1.93)	45.5 (1.79)	36 (1.42)	8 (0.31)	27 (1.06)
32	1.0 (0.039)	1.0 (0.039)	1.2 (0.05)	1.0 (0.039)	50 (1.97)	26 (1.02)	28 (1.10)	26 (1.02)	37 (1.46)	100 (3.94)	100 (3.94)	56.5 (2.22)	53 (2.07)	57 (2.24)	31 (1.22)	34.5 (1.36)

** Orifice Ø

[1)] Orifice M6 tapered

Control cover with 3 manual pressure adjustmers, electrically selectable

Dimensions in mm (inches)

NS 40, 50

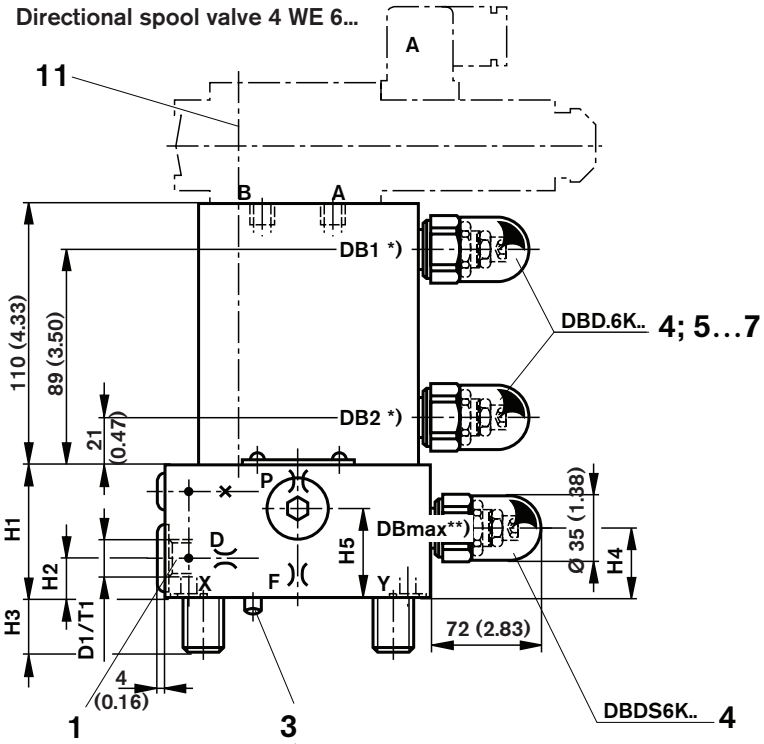

1 Port X optionally as a threaded port
2 Port Y optionally as a threaded port
3 Locating pin
4 Adjustment type “2”
5 Adjustment type “1”
6 Adjustment type “3”
7 Adjustment type “4”
8 Space required to remove the key
9 Name plate
10 Locknut
11 Valve fixing screws are included within the control cover scope of supply

*) For DB1 and DB2 select the same adjustment type

**)For DB max. only adjustment type “2” is possible

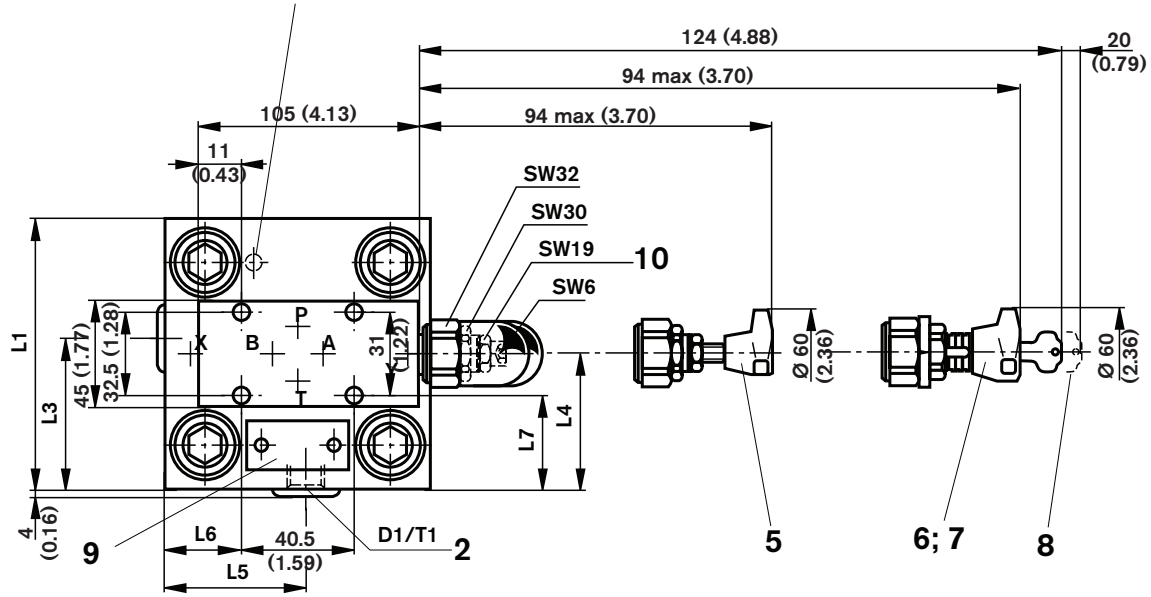

NS	P**[1)]	F**[1)]	D**[1)]	D1	H1	H2	H3	H4	H5	□L1	L3	L4	L5	L6	L7	T1
40	1.2 (0.05)	1.2 (0.05)	1.0 (0.039)	G1/4 (SAE-4; 7/16-20)	60 (2.36)	17 (0.67)	32 (1.26)	27 (1.06)	40 (1.57)	125 (4.92)	69 (2.72)	76 (2.99)	68 (2.68)	43.5 (1.71)	47 (1.85)	12 (0.47)
50	1.5 (0.06)	1.5 (0.06)	2.0 (0.08)	G1/2 (SAE-8; 3/4-16)	68 (2.68)	19.5 (0.77)	34 (1.34)	35 (1.38)	50 (1.97)	140 (5.51)	80 (3.15)	84 (3.31)	74.5 (2.93)	51 (2.01)	54.5 (2.15)	14 (0.55)

** Orifice Ø

[1)] Orifice M6 tapered

Control cover with 3 manual pressure adjusters, electrically selectable

Dimensions in mm (inches)

NS 63

Directional spool valve 4 WE 6...

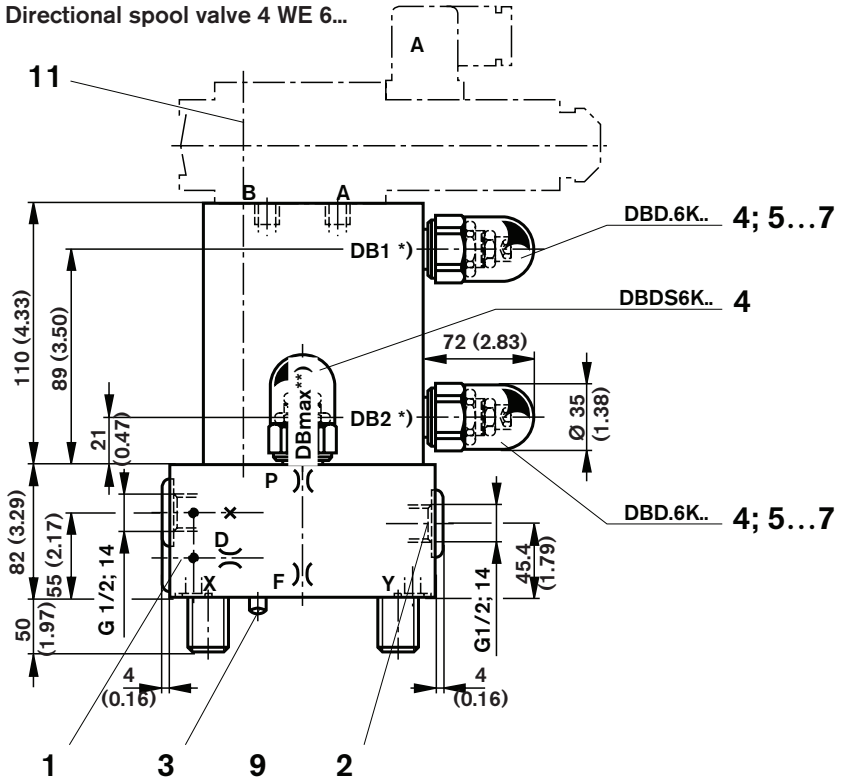

NS	P**1)	F**1)	D**1)
63	2.5 (0.10)	2.0 (0.08)	2.5 (0.10)

** Orifice Ø
1) Orifice M6 tapered

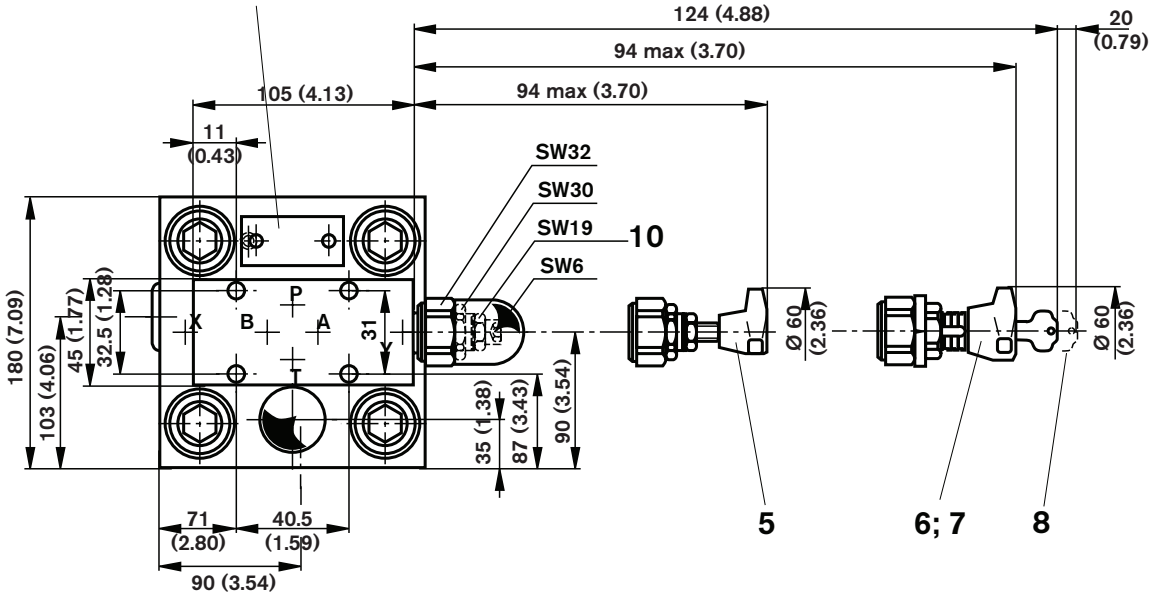

1 Port X optionally as a threaded port
2 Port Y optionally as a threaded port
3 Locating pin
4 Adjustment type “2”
5 Adjustment type “1”
6 Adjustment type “3”
7 Adjustment type “4”
8 Space required to remove the key
9 Name plate
10 Locknut
11 Valve fixing screws are included within the control cover scope of supply

*) For DB1 and DB2 select the same adjustment type
**) For DB max. only adjustment type “2” is possible

Control cover with 3 manual pressure adjusters, electrically selectable

Dimensions in mm (inches)

NS 80, 100

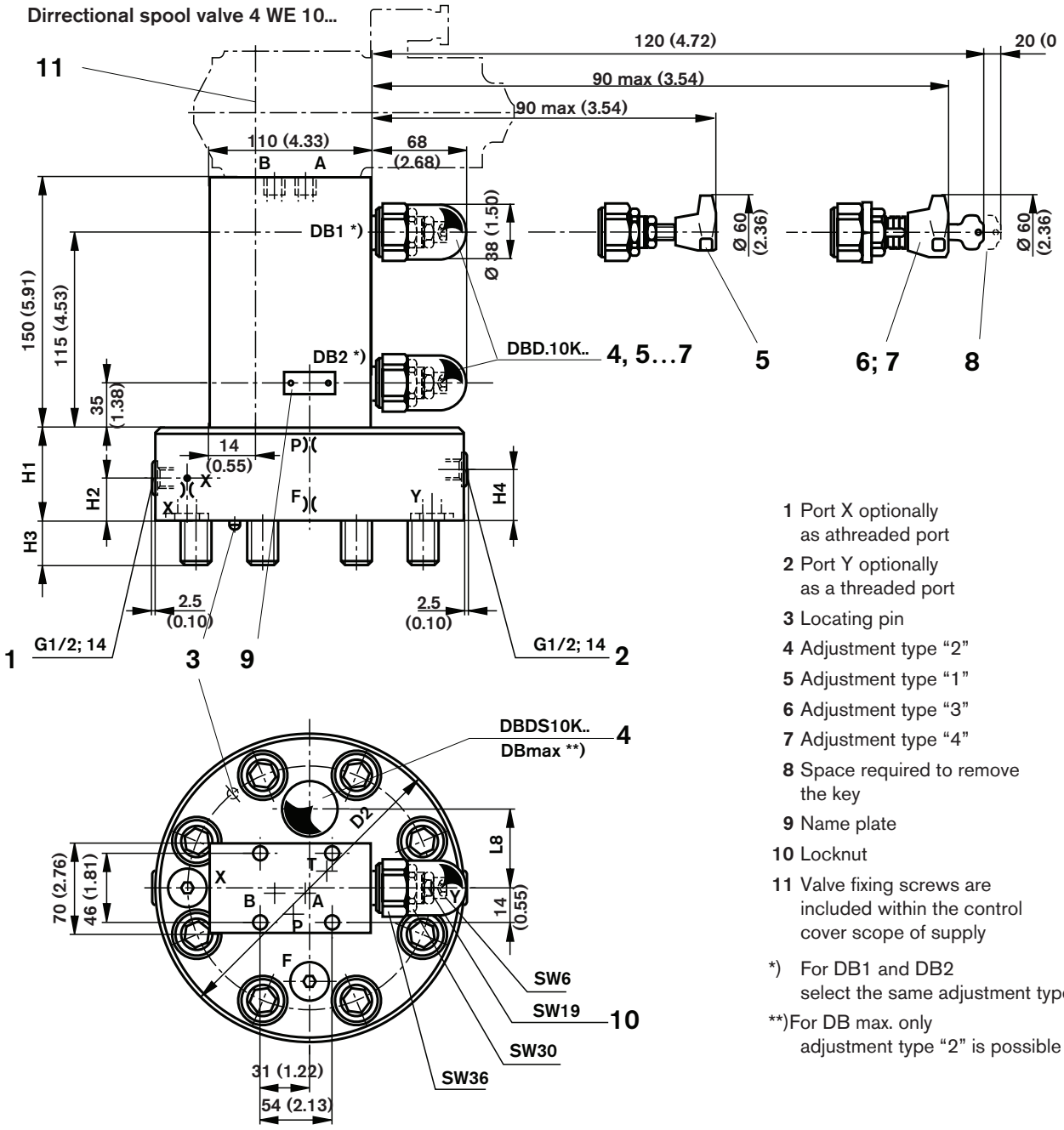

1 Port X optionally as athreaded port
2 Port Y optionally as a threaded port
3 Locating pin
4 Adjustment type “2”
5 Adjustment type “1”
6 Adjustment type “3”
7 Adjustment type “4”
8 Space required to remove the key
9 Name plate
10 Locknut
11 Valve fixing screws are included within the control cover scope of supply

*) For DB1 and DB2 select the same adjustment type

**)For DB max. only adjustment type “2” is possible

NS	P**[1)]	X**[2)]	F**[2)]	D2	H1	H2	H3	H4	L8
80	3.5 (0.14)	3.0 (0.12)	2.5 (0.10)	250 (9.84)	100 (3.94)	30 (1.18)	45 (1.77)	52 (2.05)	75 (2.95)
100	3.5 (0.14)	3.0 (0.12)	2.5 (0.10)	300 (11.81)	100 (3.94)	30 (1.18)	51 (2.01)	52 (2.05)	85 (3.35)

** Orifice Ø
1) Orifice M8 x1 tapered
2) Orifice G 1/4 tapered

Control cover for electrical-proportional pressure adjustment, without maximum pressure limitation

NS 16 to 63

Dimensions in mm (inches)

1	2	3	5	9
LFA		DBE –	7X /	

NS 16 = **16**
NS 25 = **25**
NS 32 = **32**
NS 40 = **40**
NS 50 = **50**
NS 63 = **63**

For mounting a proportional pressure relief valve **without** electrical feedback = **DBE**

Series 7X (NS 16 to 63) = **7X**

12 = SAE threaded external connections and UNC mounting bolts

– = Metric threaded connections

No code = NBR seals
V = FKM seals
(other seals on request)
Attention!
The compatibility of the seals and pressure fluid has to be taken into account!

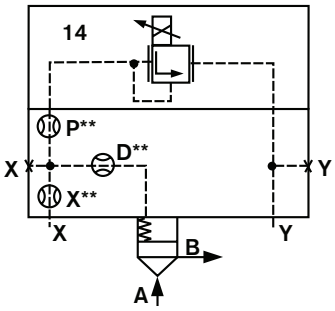

LFA...DBE-7X/ NS 16

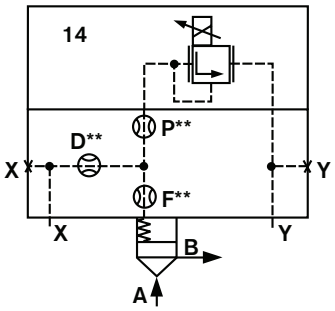

LFA...DBE-7X/ NS 25, 32, 40

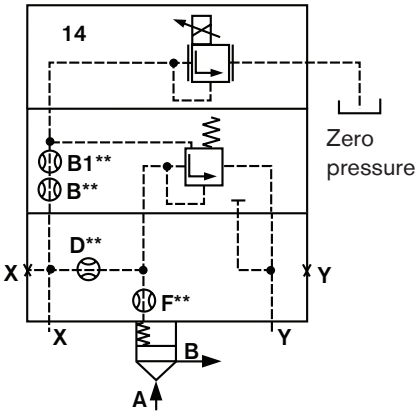

LFA...DBE-7X/ NS 50, 63

NS 16 to 40

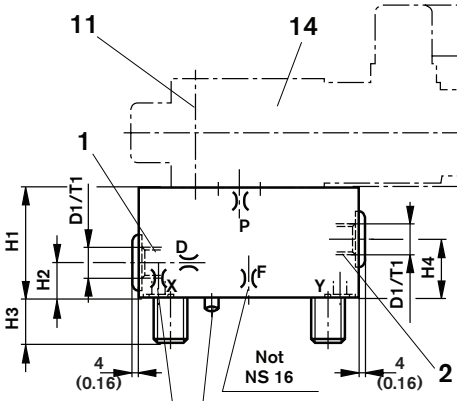

NS 50, 63

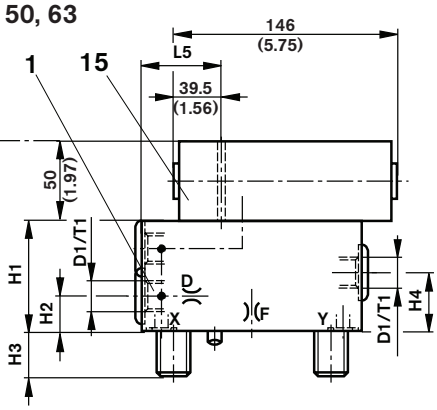

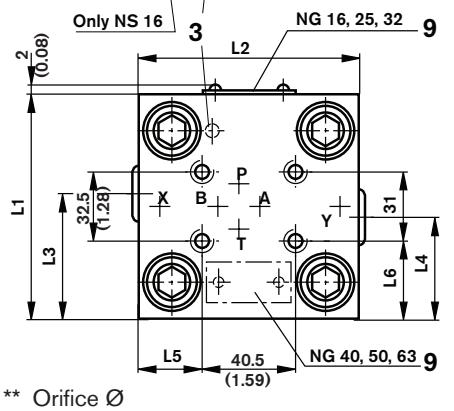

** Orifice Ø
1) Orifice M6 tapered
2) Orifice M6 tapered (NS 16), M8 x 1tapered (NS 25 ... 63)

NS	16	25	32	40	50	63
B**1)	–	–	–	–	0.8 (0.03)	0.8 (0.03)
P**1)	1.0 (0.039)	1.0 (0.039)	1.0 (0.039)	1.5 (0.06)	–	–
X**1)	0.8 (0.03)	–	–	–	–	–
F**1)	–	0.8 (0.03)	1.0 (0.039)	1.2 (0.05)	1.5 (0.06)	2.0 (0.08)
D**2)	0.8 (0.03)	0.8 (0.03)	0.8 (0.03)	1.0 (0.039)	2.0 (0.08)	2.5 (0.10)
D1	G1/4 (SAE4; 7/16-20)	G1/4 (SAE4; 7/16-20)	G1/4 (SAE4; 7/16-20)	G1/2 (SAE8; 3/4-16)	G1/2 (SAE8; 3/4-16)	G1/2 (SAE8; 3/4-16)
H1	40 (1.57)	40 (1.57)	50 (1.97)	60 (2.36)	68 (2.68)	82 (3.29)
H2	17 (0.67)	19 (0.75)	26 (1.02)	30 (1.18)	32 (1.26)	30 (1.18)
H3	15 (0.59)	24 (0.94)	28 (1.10)	32 (1.26)	34 (1.34)	50 (1.97)
H4	20 (0.79)	19 (0.75)	26 (1.02)	30 (1.18)	32 (1.26)	40 (1.57)
L1	65 (2.56)	85 (3.35)	100 (3.94)	125 (4.92)	140 (5.51)	180 (7.09)
L2	80 (3.15)	85 (3.35)	100 (3.94)	125 (4.92)	140 (5.51)	180 (7.09)
L3	36.5 (1.44)	49 (1.93)	56.5 (2.22)	72 (2.83)	80 (3.15)	100 (3.94)
L4	23.5 (0.93)	36 (1.42)	43.5 (1.71)	53 (2.07)	50 (1.97)	80 (3.15)
L5	7 (0.28)	23.5 (0.93)	31 (1.22)	43.5 (1.71)	51 (2.01)	71 (2.01)
L6	17 (0.67)	27 (1.06)	34.5 (1.36)	47 (1.85)	54.5 (2.15)	74.5 (2.93)
T1	12 (0.47)	12 (0.47)	12 (0.47)	14 (0.55)	14 (0.55)	14 (0.55)

1 Port X optionally as a threaded port
2 Port Y optionally as a threaded port
3 Locating pin
9 Name plate
11 Valve fixing screws are included within the control cover scope of supply
14 Prop. pressure relief valve type DBET-6X/... (see summary on page 14, also catalogue sheet RE 29162)
15 Pressure relief valve NS 6 (included within the scope of supply)

Control cover for electrical-proportional pressure adjustment, with maximum pressure limitation

NS 16 to 100

1	2	3	5	6	9	
LFA		**DBEM**				

Nom. size 16 = **16**
Nom. size 25 = **25**
Nom. size 32 = **32**
Nom. size 40 = **40**
Nom. size 50 = **50**
Nom. size 63 = **63**
Series 7X

Nom. size 80 = **80**
Nom. size 100 = **100**
Series 6X

For mounting a proportional pressure relief valve
Without electrical feedback and
with maximum pressure safety = **DBEM**

Series 6X (NS 80 to 100) = **6X**
Series 7X (NS 16 to 63) = **7X**

12 = SAE threaded external connections and UNC mounting bolts
– = Metric threaded connections

No code = NBR seals
V = FKM seals
(other seals on request)

Attention!
The compatibility of the seals and pressure fluid has to be taken into account!

Pressure stages
(take max. perm. pressure of pilot valve into account)

NS 16, 25 ,32	NS 40, 50, 63, 80, 100
025 = 25 bar	**025** = 25 bar
050 = 50 bar	**050** = 50 bar
100 = 100 bar	**100** = 100 bar
200 = 200 bar	**200** = 200 bar
315 = 315 bar	**315** = 315 bar
420 = 420 bar	**400** = 400 bar

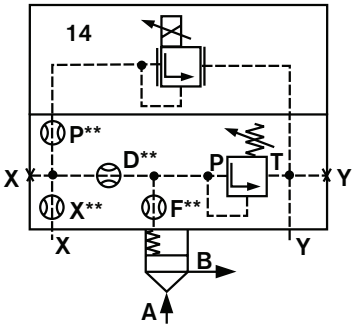

LFA..DBEM-7X/...
NS 16, 25, 32

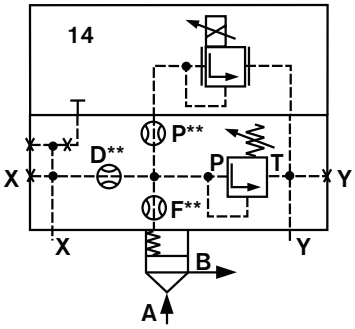

LFA..DBEM-7X/...
NS 40

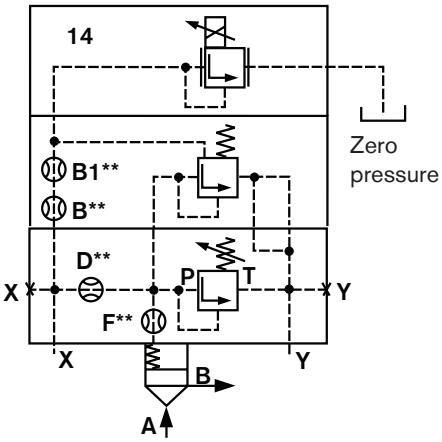

LFA..DBEM-7X/...
NS 50, 63

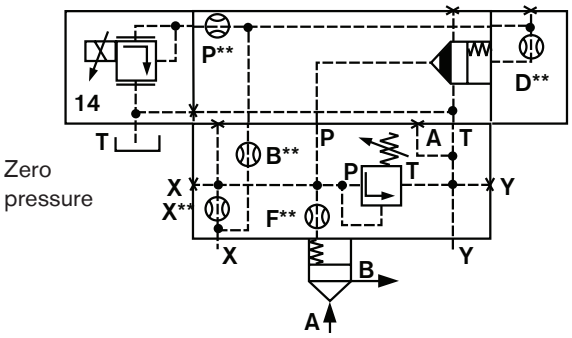

LFA..DBEM-6X/...
NS 80, 100

For item nos. see page 40

Control cover for electrical-proportional pressure adjustment, with maximum pressure limitation

NS 16, 25, 32

Dimensions in mm (inches)

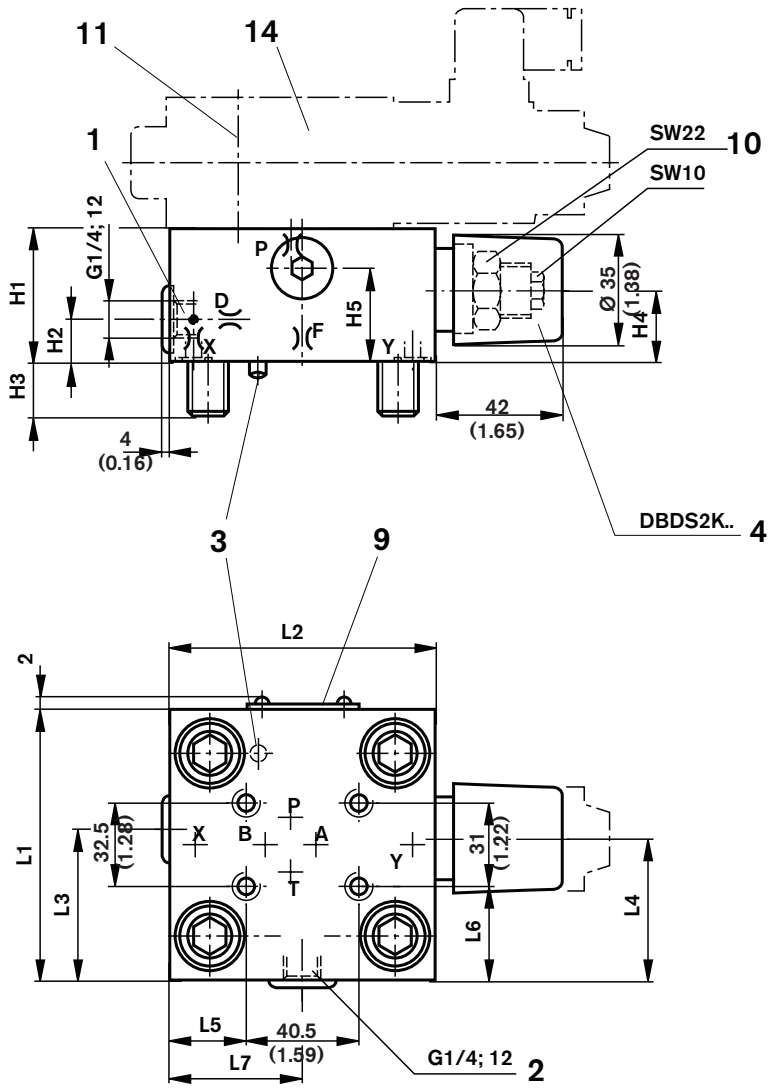

Ports T and Y - zero pressure

1 Port X optionally as a threaded port

2 Port Y optionally as a threaded port

3 Locating pin

4 Adjustment type “2”

9 Name plate

10 Locknut

11 Valve fixing screws are included within the control cover scope of supply

14 Proportional pressure relief valve type DBET-6X/…YG24 (see summary on page 14, also catalog sheet RE 29162)

NS	P**[1)]	X**[1)]	F**[1)]	D**[1)]	H1	H2	H3	H4	H5	L1	L2	L3	L4	L5	L6	L7
16	1.0 (0.039)	0.8 (0.03)	1.0 (0.039)	0.8 (0.03)	40 (1.57)	17 (0.67)	15 (0.59)	19 (0.75)	28 (1.10)	65 (2.56)	80 (3.15)	36.5 (1.44)	32.5 (1.28)	7 (0.28)	17 (0.67)	35 (1.38)
25	1.0 (0.039)	0.8 (0.03)	1.0 (0.039)	0.8 (0.03)	40 (1.57)	19 (0.75)	24 (0.94)	19 (0.75)	28 (1.10)	85 (3.35)	85 (3.35)	49 (1.93)	45.5 (1.79)	8 (0.31)	27 (1.06)	36 (1.42)
32	1.0 (0.039)	1.0 (0.039)	1.2 (0.05)	1.0 (0.039)	50 (1.97)	26 (1.02)	28 (1.10)	26 (1.02)	37 (1.46)	100 (3.94)	100 (3.94)	56.5 (2.22)	53 (2.07)	31 (1.22)	34.5 (1.36)	57 (2.24)

** Orifice Ø

[1)] Orifice M6 tapered

Control cover for electrical-proportional pressure adjustment, with maximum pressure limitation

Dimensions in mm (inches)

NS 40

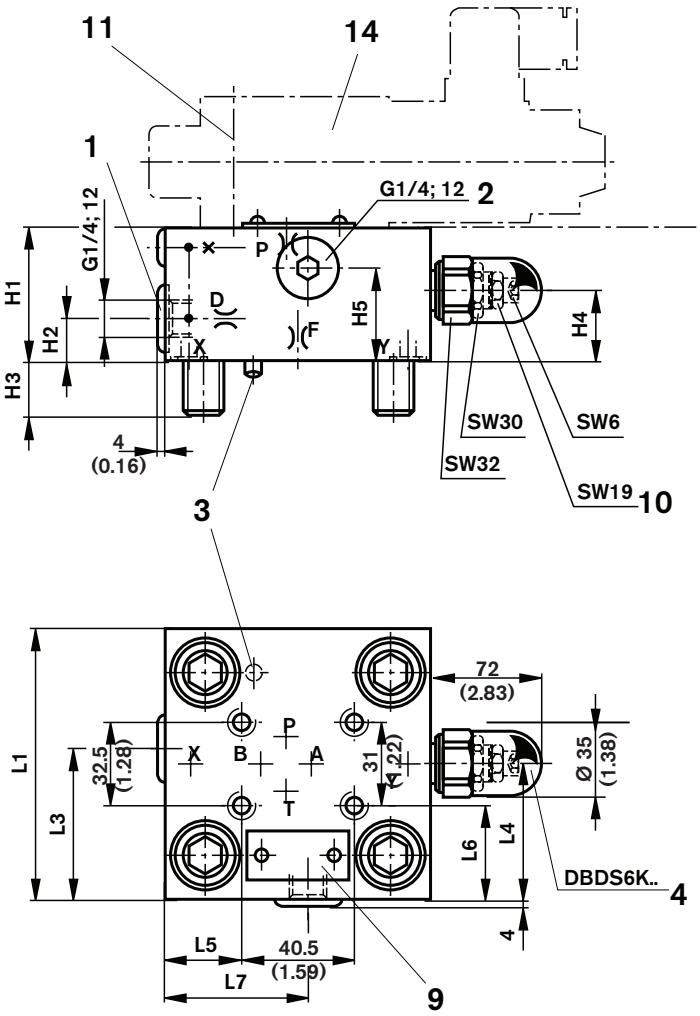

NS 50

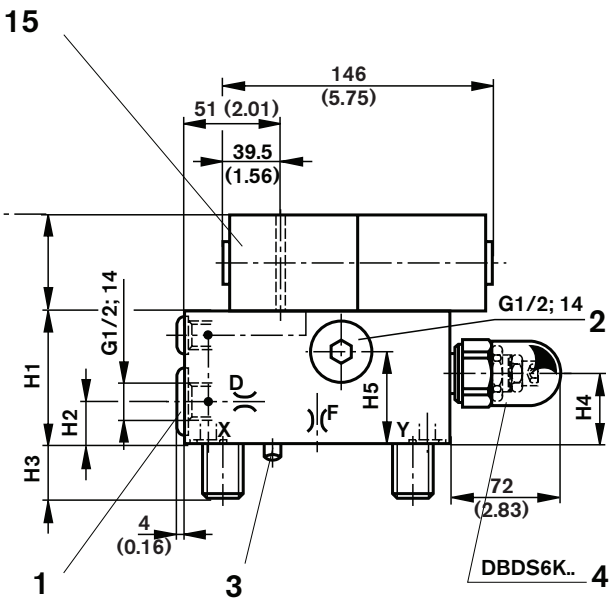

1 Port X optionally as a threaded port
2 Port Y optionally as a threaded port
3 Locating pin
4 Adjustment type “2”
9 Name plate
10 Locknut
11 Valve fixing screws are included within the control cover scope of supply
14 Propportional pressure relief valve
type DBET-6X/…G24 (NS 40)
type DBET-6X/…YG24 (NS 50)
(see summary on page 14, also catalog sheet RE 29162)
15 Pressure relief valve NS 6
(is included within the scope of supply)

NS	B**[1)]	P**[1)]	F**[1)]	D**[1)]	H1	H2	H3	H4	H5	□ L1	L3	L4	L5	L6	L7
40		1.5 (0.06)	1.2 (0.05)	1.0 (0.039)	60 (2.36)	20 (0.79)	32 (1.26)	27 (1.06)	40 (1.57)	125 (4.92)	69 (2.72)	76 (2.99)	43.5 (1.71)	47 (1.85)	68 (2.68)
50	0.8 (0.03)		1.5 (0.06)	2.0 (0.08)	68 (2.68	19.5 (0.77)	34 (1.34)	35 (1.38)	50 (1.97)	140 (5.51)	80 (3.15)	84 (3.31)	51 (2.01)	54.5 (2.15)	74.5 (2.93)

** Orifice Ø
[1)] Orifice M6 tapered

Control cover for electrical-proportional pressure adjustment, with maximum pressure limitation

Dimensions in mm (inches)

NS 63

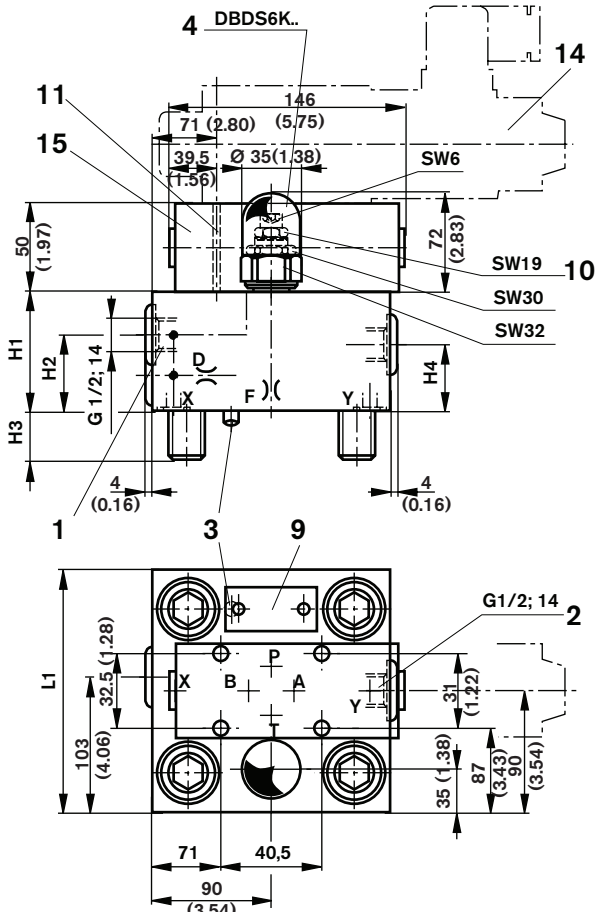

NS 80, 100

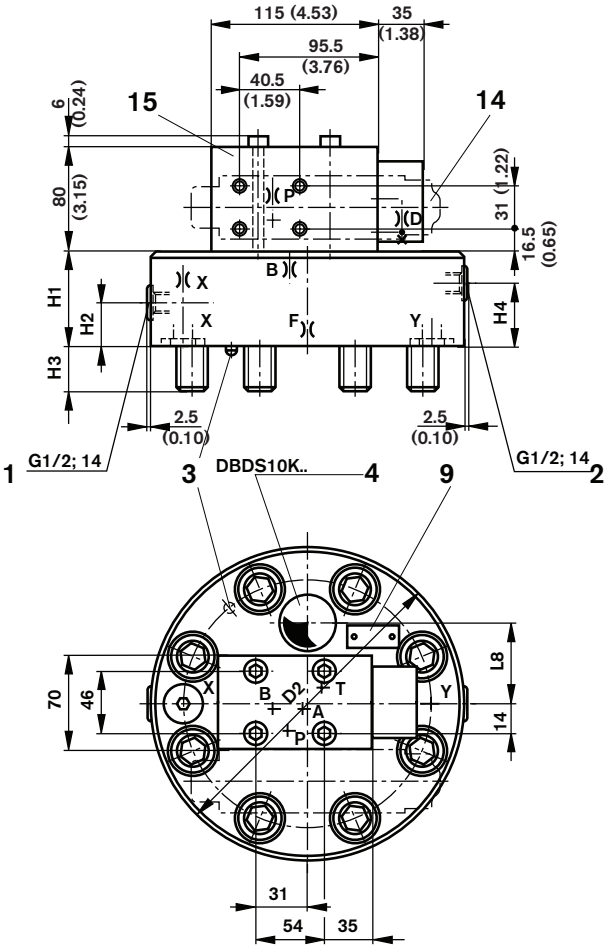

1 Port X optionally as a threaded port

2 Port Y optionally as a threaded port

3 Locating pin

4 Adjustment type “2”

9 Name plate

10 Locknut

11 Valve fixing screws are included within the control cover scope of supply

14 Proportional pressure relief valve type DBET-6X/…YG24 (see summary on page 14, also catalog sheet Re 29162)

15 Pressure relief valve NS 6 (is included within the scope of supply)

NS	B**[1]	P**[1]	X**[2]	F**[2]	D**[1]	H1	H2	H3	H4	D2	□ L1	L8
63	0.8 (0.03)			2.0 (0.08)	2.5 (0.10)	82 (3.29)	55 (2.17)	50 (1.97)	45 (1.77)		180 (7.09)	
80	0.8 (0.03)	1.0 (0.039)	3.0 (0.12)	2.5 (0.10)		100 (3.94)	30 (1.18)	45 (1.77)	52 (2.05)	250 (9.84)		75 (2.95)
100	0.8 (0.03)	1.0 (0.039)	3.5 (0.14)	3.0 (0.12)		100 (3.94)	30 (1.18)	51 (2.01)	52 (2.05)	300 (11.81)		85 (3.35)

** Orifice Ø

[1] Orifice M6 tapered (NS 63) orifice M8 x 1 tapered (NS 80, 100)

[2] Orifice M6 tapered (NS 63) orifice G 1/4 tapered (NS 80, 100)

Pressure reducing function

Ordering details: pressure reducing cartridge valve (without associated control cover LFA..DB..)

LC		DR		E	7X /	

Nominal size 16	= 16
Nominal size 25	= 25
Nominal size 32	= 32
Nominal size 40	= 40
Nominal size 50	= 50
Nominal size 63	= 63

Closing pressure approx. 0 bar (without spring)	= 00
Closing pressure approx. 2 bar	= 20
Closing pressure approx. 3 bar	= 30 [1]
Closing pressure approx. 4 bar (standard spring)	= 40
Closing pressure approx. 5 bar	= 50 [2]
Closing pressure approx. 8 bar	= 80 [3]

No code = NBR seals
V = FKM seals
(other seals on request)
Attention!
The compatibility of the seals and pressure fluid has to be taken into account!

7X = (NS 16 to 63) Series 70 to 79
(70 to 79: unchanged installation and connection dimensions)

E = Spool without fine control grooves

[1] Closing pressure 3.0 bar only for NS 16 for mounting a pilot operated pressure relief valve type DBC . -5X/…SO187 (see catalogue sheet RE 25 802)

[2] Only for NS 16, 25 and 32

[3] Special installation space is required (see page 47)

Symbol: cartridge valves

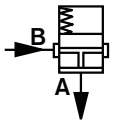

Type LC..DR..

Technical data (for applications outside these parameters, please consult us!)

Maximum operating pressure	– Ports A and B	bar (PSI)	315 (4569)					
Maximum flow (recommended)		NS	16	25	32	40	50	63
	– LC..DR20.../..	L/min (GPM)	100 (26)	200 (53)	300 (79)	750 (198)	1000 (264)	1600 (423)
	– LC..DR40.../..	L/min (GPM)	150 (40)	300 (79)	450 (119)	1000 (264)	1300 (343)	2000 (528)

Pressure fluid [1] Suitable for NBR **and** FKM seals [2] **Only** suitable for FKM seals		Mineral oil (HL, HLP) to DIN 51 524 [1]; Fast bio-degradable pressure fluids to VDMA 24 568 (also see RE 90 221); HETG (rape seed oil) [1]; HEPG (polyglycols) [2]; HEES (synthetic ester) [2]; other pressure fluids on request
Pressure fluid temperature range	°C (°F)	– 30 to + 80 (– 86 to + 176) for NBR seals
		– 20 to + 80 – 68 to +176) for FKM seals
Viscosity range	mm^2/s (SUS)	2.8 to 380 (13 to 1761)
Cleanliness class to ISO code		Maximum permissible degree of contamination of the pressure fluid is to ISO 4406 (C) class 20/18/15 [3]

[3] The cleanliness class stated for the components must be adhered too in hydraulic systems. Effective filtration prevents faults from occurring and at the same time increases the component service life. For the selection of filters see catalogue sheets RE 50 070, RE 50 076 and RE 50 081.

Preferably use 5 and 8 bar springs for flow control. The usable Δp is available on request.

Attention!
2-way cartridge valves type LC..DR... are combined with control covers type LFA..DB... (for ordering details see page 13).

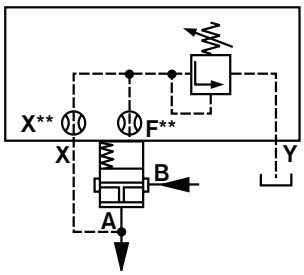

Pressure reducing function
Normally open

E.g.
Type LFA...DB...
Type LC..DR 40...

Characteristic curves - measured with HLP 46; $\vartheta_{oil\text{-}/}$ = 40 °C (104°F) ± 5 °C (41°F)

LC 16 DR...

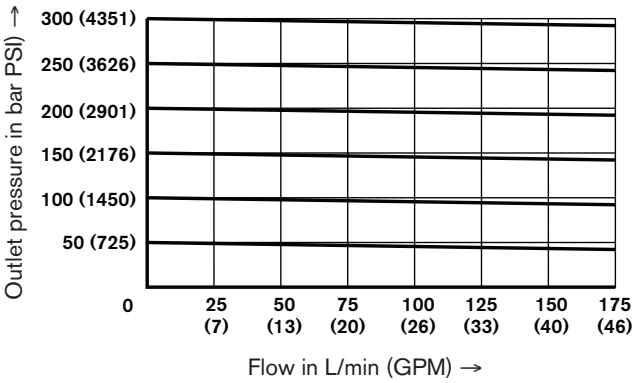

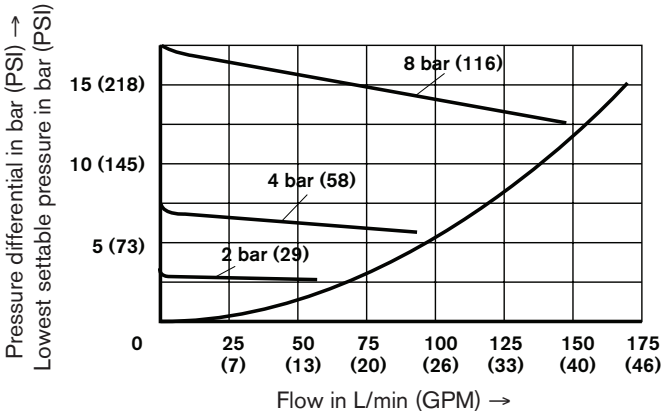

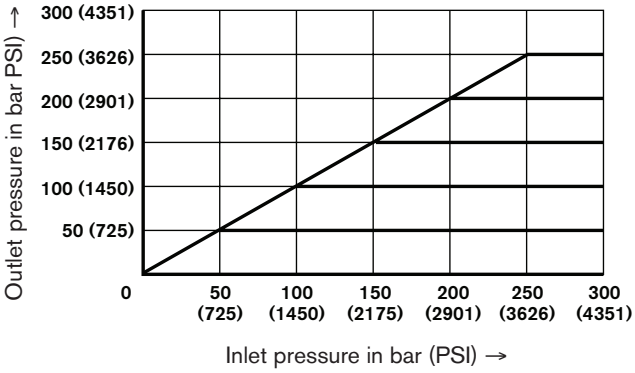

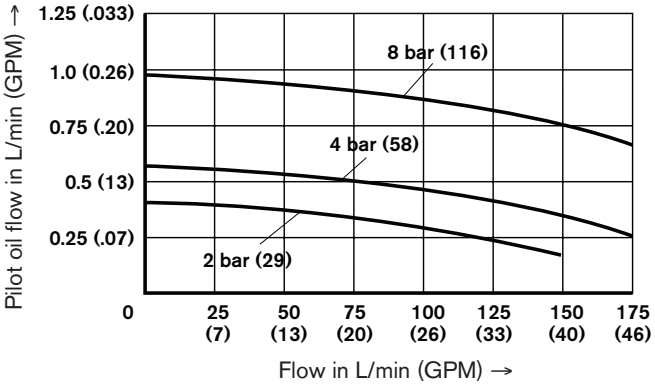

Measured at: p_a = 50 bar (725 PSI)

LC 25 DR...

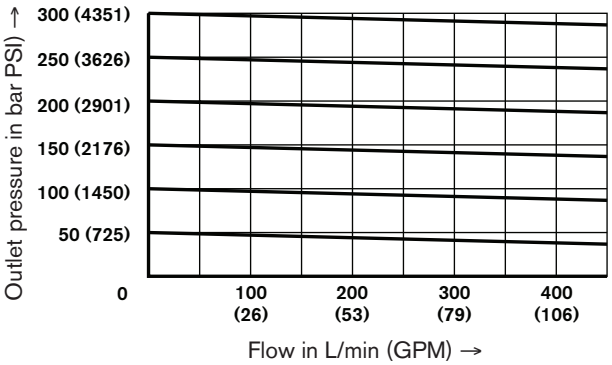

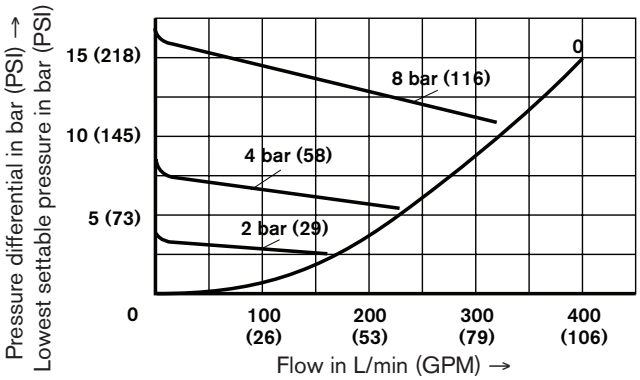

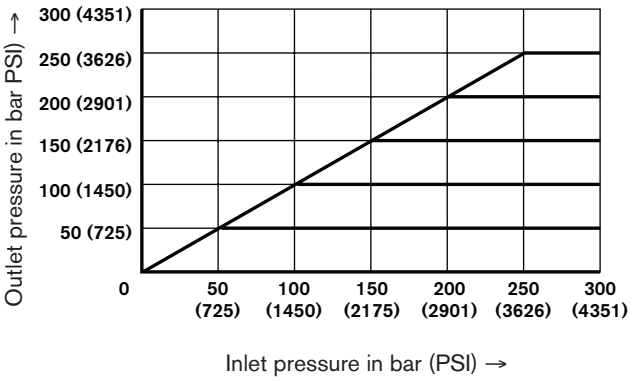

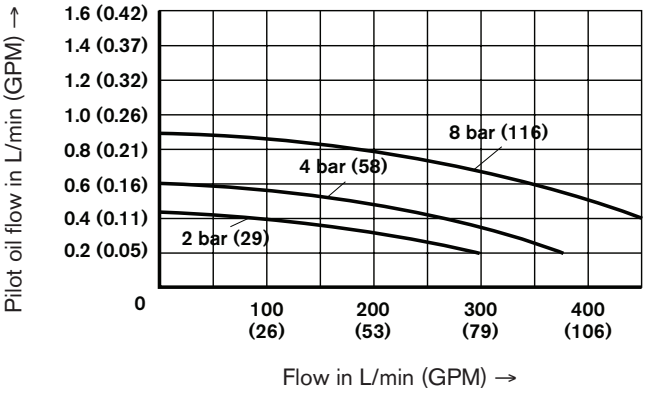

Measured at: p_a = 50 bar (725 PSI)

Characteristic curves - measured with HLP 46; $\vartheta_{oil\ -/}$ = 40 °C (104°F) ± 5 °C (41°F)

LC 32 DR...

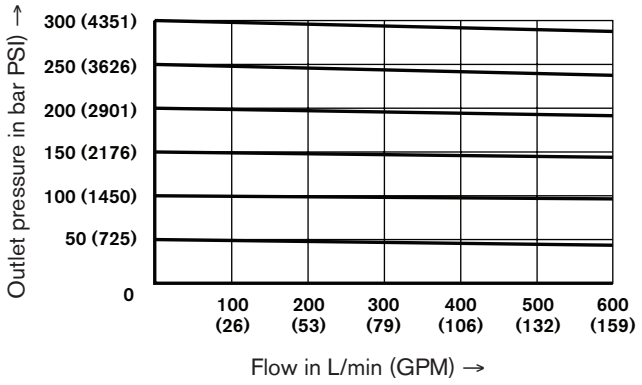

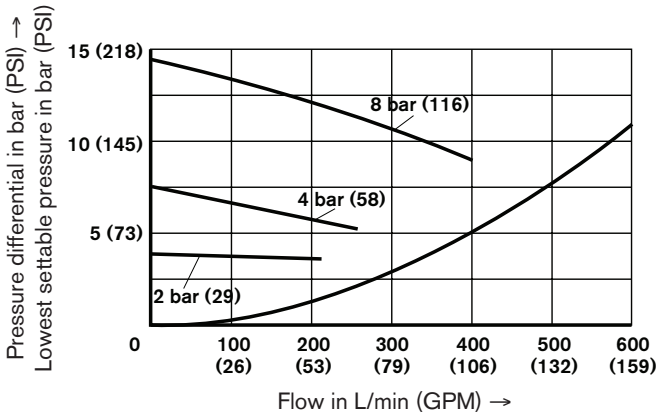

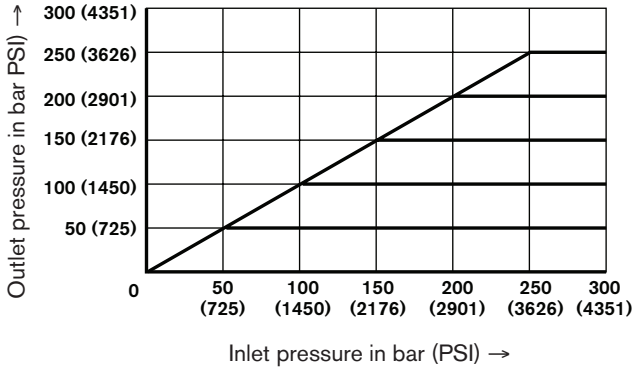

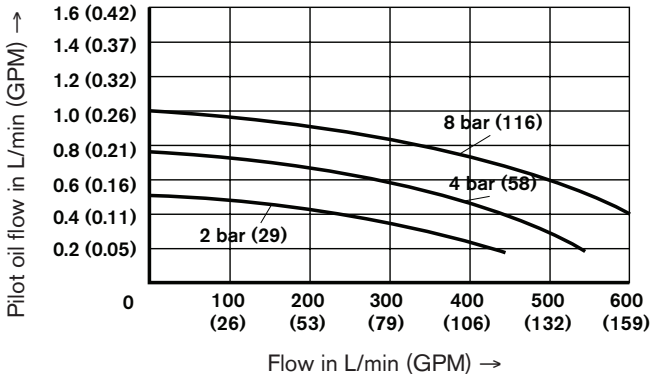

Measured at: p_a = 50 bar (725 PSI)

LC 40 DR...

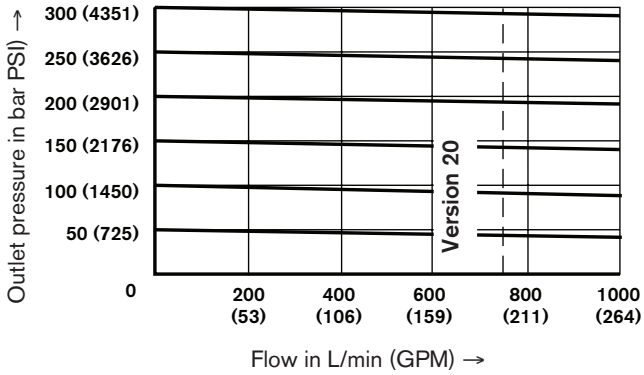

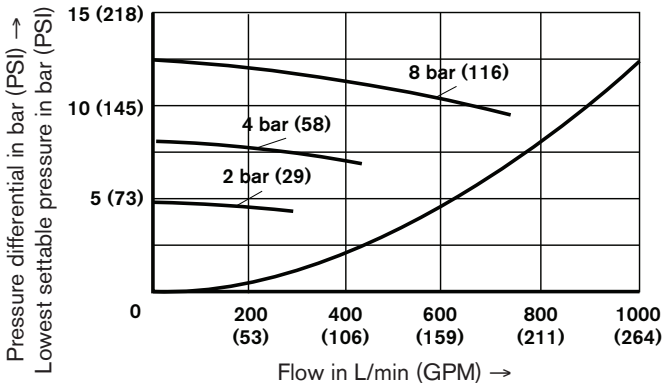

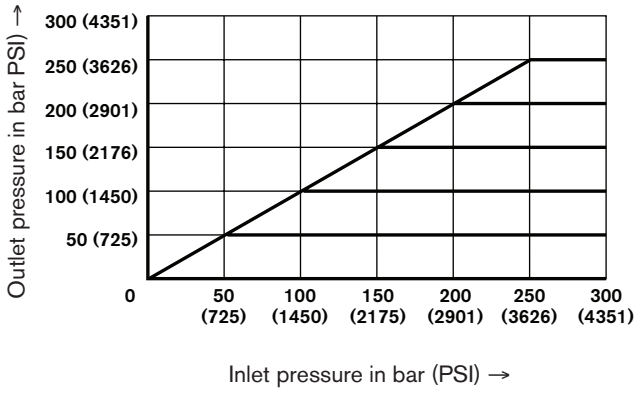

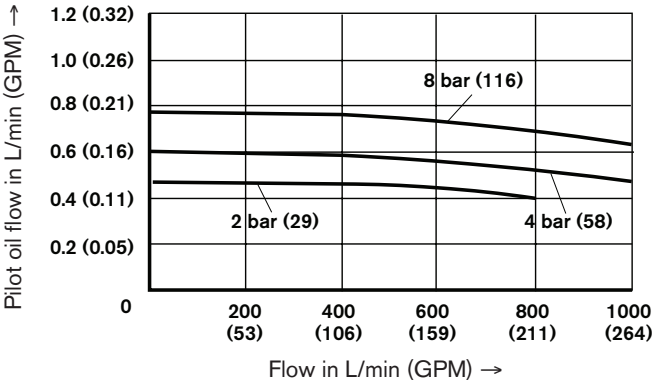

Measured at: p_a = 50 bar (725 PSI)

Characteristic curves - measured with HLP 46; $\vartheta_{oil\ -/}$ = 40 °C (104°F) ± 5 °C (41°F)

LC 50 DR...

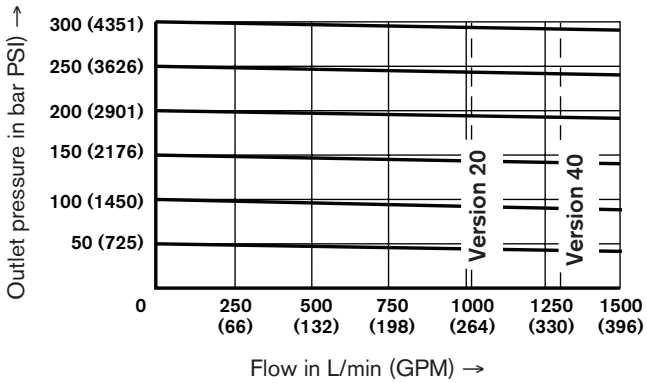

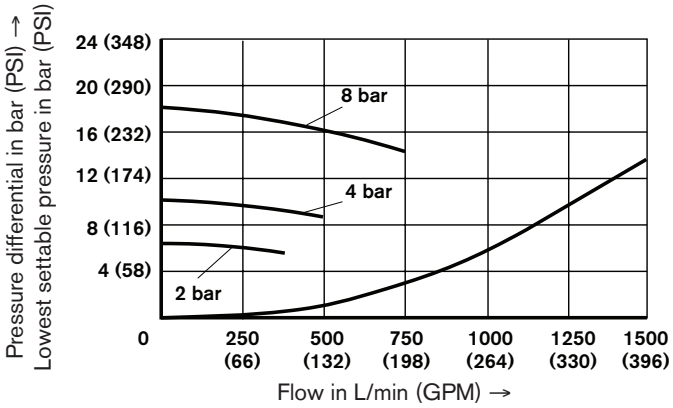

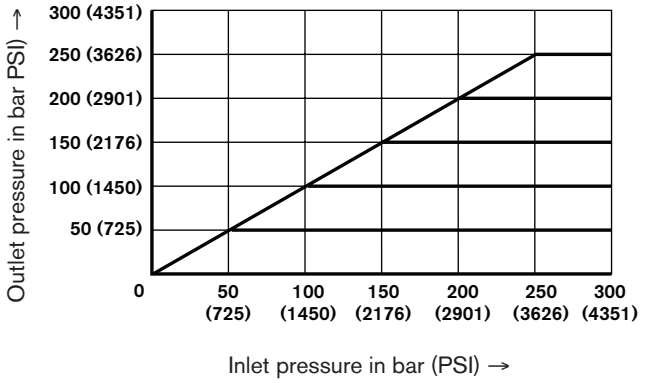

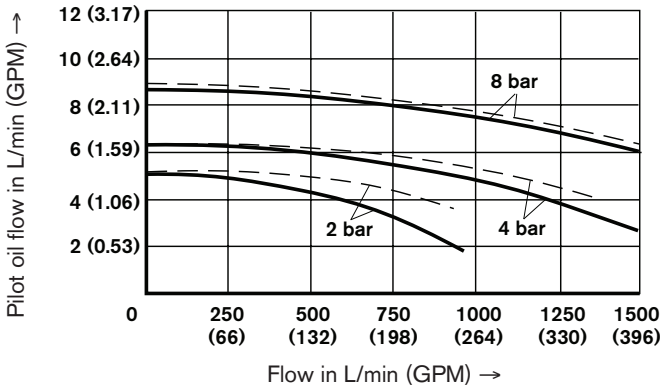

Measured at: p_a = 50 bar
—— p_e = 100 bar
– – – p_e = 350 bar

LC 63 DR...

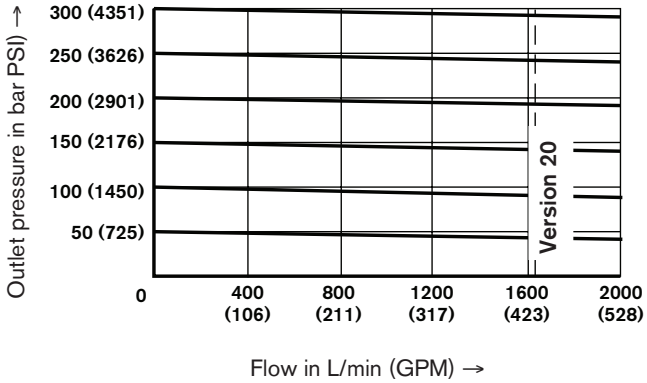

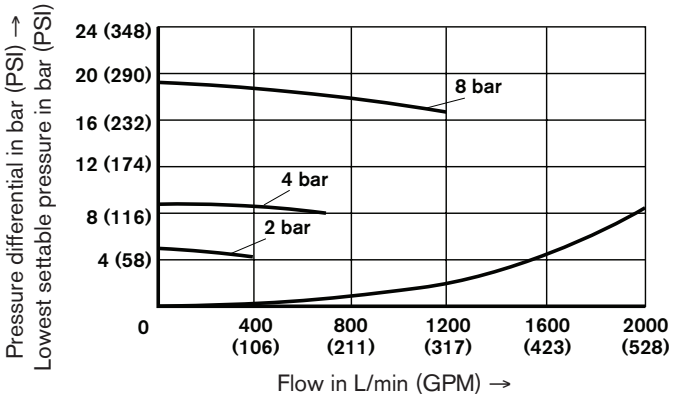

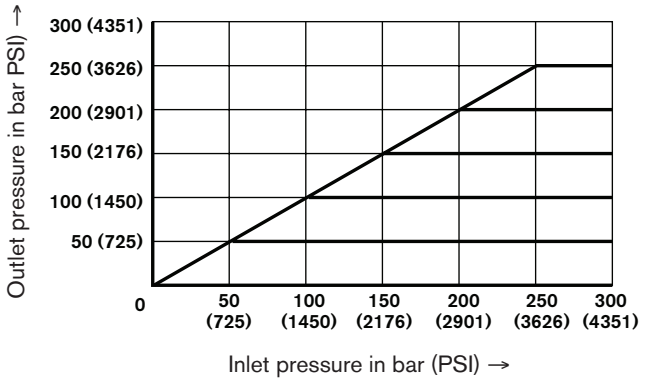

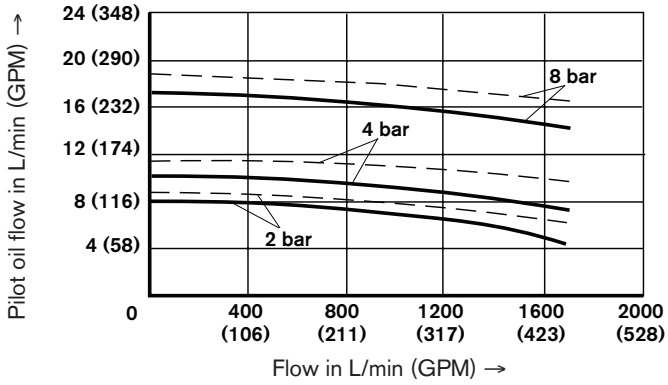

Measured at: p_a = 50 bar
—— p_e = 100 bar
– – – p_e = 350 bar

Seal kits for cartridge valves type LC...

Nom. size	Material No.	
	NBR seals	FKM seals
16	R900313104	R900313107
25	R900313105	R900313108
32	R900313106	R900313109

Nom. size	Material No.	
	NBR seals	FKM seals
40	R900873022	R900873025
50	R900873023	R900873026
63	R900873024	R900873027

Compression springs for cartridge valves type LC...

NS	Spring dimensions in mm	Opening pressure in bar	Material No.
16	10.2/1.3 x 40.5/8.0	2.0	R900062747
	10.0/1.6 x 38.2/9.0	3.0	R900062753
	9.8/1.7 x 38.0/9.0	4.0	R900062754
	9.7/1.9 x 35.7/8.5	5.0	R900062757
	9.2/2.4 x 60.5/14.5	8.0 [1)]	R900082073
25	15.3/2.25 x 55.0/8.0	2.0	R900062762
	14.9/2.7 x 53.4/8.5	3.0	R900062764
	14.7/2.8 x 53.5/8.5	4.0	R900062820
	14.6/3.0 x 52.5/8.5	5.0	R900062819
	14.1/3.5 x 78.5/12.0	8.0 [1)]	R900082072
32	19.6/2.8 x 69.5/7.5	2.0	R900062813
	19.2/3.2 x 71.0/8.5	3.0	R900062783
	19.1/3.4 x 72.0/9.5	4.0	R900062810
	19.1/3.5 x 72.8/9.0	5.0	R900062805
	18.5/4.0 x 109/14.5	8.0 [1)]	R900082071

NS	Spring dimensions in mm	Opening pressure in bar	Material No.
40	25.9/4.25 x 63/6	2.0	R900206675
	25.7/4.5 x 68.5/6	4.0	R900206673
	24.8/5.3 x 105/10	8.0 [1)]	R900206671
50	33.2/5 x 82/5.5	2.0	R900206684
	32.8/5.3 x 92/6.5	4.0	R900206681
	31.7/6.5 x 137/10.5	8.0 [1)]	R900206680
63	40.6/6.5 x 108/7	2.0	R900206690
	40.7/6.5 x 127.5/7.5	4.0	R900206692
	38.6/8.5 x 183.5/11.5	8.0 [1)]	R900206689

[1)] These springs require an additional installation length. When using standaard control covers an additional sandwich plate type LFA . D22… must be used.

Exception:
Control cover type “D” can be replaced by type LFA . D8-../F (no sandwich plate is required).

Control cover for pressure reducing function

Main spool normally closed - LC..DB 40 D.. – separate order

General notes

1	2	3	4	5	6	7
LFA			—	7X	/	

• = Available

Nominal size 16	25	32	40	50	63	Type	Adjustment type	Series	Pressure stage in bar for nominal size ...DR... ..DRW.	..DRE..	Seal material	Page
•	•	•	•	•	•	**DR**			025		For ordering details see pages for the individual control cover variants	53, 54
•	•	•	•	•	•	**DRW**			075			55, 56
	•	•	•	•	•	**DREV**			150	006		57, 58
	•	•	•	•	•	**DREZ**			210	014		57, 58
	•	•	•	•	•	**DREWV**			315	006		59, 60
	•	•	•	•	•	**DREWZ**			350	014		59, 60

4

Adjustment elements for pressure reducing valves

1 = Rotary knob
2 = Hexagon with protective cap
3 = Rotary knob with scale
(H-key to automotive industry standards)
4 = Rotary knob with scale

5

Series

7X = Series 70 to 79
(unchanged installation and connection dimensions)

Attention !

Control covers type LFA..DR... are combined with 2-way cartridge valves type LC..DB 40 D... (for ordering details see page 5)

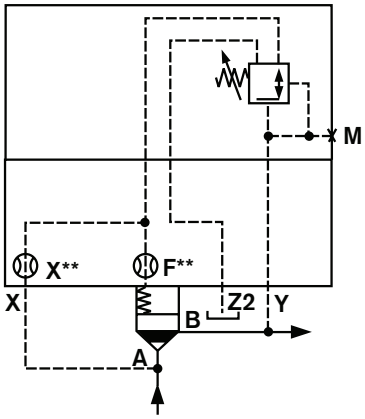

Pressure reducing function

Normally closed

E.g.
Type LFA...DR...
Type LC..DB 40 D..

Control cover for pressure reducing function

Main spool normally closed - LC..DB 40 D.. – separate order

Technical data (for applications outside these parameters, please consult us!)

Pressure fluid [1] Suitable for NBR **and** FKM seals [2] **Only** suitable for FKM seals		Mineral oil (HL, HLP) to DIN 51 524 [1]; Fast bio-degradable pressure fluids to VDMA 24 568 (also see RE 90 221); HETG (rape seed oil) [1]; HEPG (polyglycols) [2]; HEES (snthetic ester) [2]; Other pressure fluids on request
Pressure fluid temperature range	°C (°F)	– 30 to + 80 (– 86 to + 176) for NBR seals
		– 20 to + 80 – 68 to +176) for FKM seals
Viscosity range	mm^2/s (SUS)	2.8 to 380 (13 to 1761)
Cleanliness class to ISO code		Maximum permissible degree of contamination of the pressure fluid is to ISO 4406 (C) class 20/18/15 [3]

[3] The cleanliness class stated for the components must be adhered to in hydraulic systems. Effective filtration prevents faults from occurring and at the same time increases the component service life.
For the selection of filters see catalogue sheets RE 50 070, RE 50 076 and RE 50 081.

Control cover

Max. perm. operating pressure at port ...		Control cover type LFA..DR.-../... LFA..DRW.-../...	Control cover type LFA..DRE..-../...
...X (primary pressure)		315 bar (83 GPM)	350 bar (92 GPM)
...Y (secondary pressure = max. settable pressure)		315 bar (83 GPM)	350 bar (92 GPM)
...Z2	When regulating the pressure	Zero pressure - up to ≈ 2 bar (29 PSI)	
	Static	60 bar (870 GPM)	315 bar (83 GPM)
...T	When regulating the pressure		Zero pressure - up to ≈ 2 bar (29 PSI)
	Static (corresponds to the permissible tank pressure of the pilot valves)		100 bar (1450 PSI)

Notes on pilot control valves (not included within the scope of supply, must be ordered separately!)

Directional spool valve (porting pattern form A 6 to DIN 24 340)

Directional spool valve	Nominal size	Catalogue sheet No.	Control cover
3WE 6 A-../...	6	23 178	DREWV, DREWZ
3WE 6 B9-../...	6	23 178	DRW

Proportional pressure relief valve

Prop. pressure relief valve	Nominal size	Catalog sheet No.	Control cover
DBET-6X/...YG24	6	RE 29162	DREV, DREWV
DBETR-1X/...	On request	On request	DREZ, DREWZ

[4] Possible pressure stages 50, 100, 200, 315

Valve fixing screws are included within the control cover scope of supply.

Overview of symbols (basic symbols) **- pressure reducing function**

Valid symbols are shown in the following type descriptions !

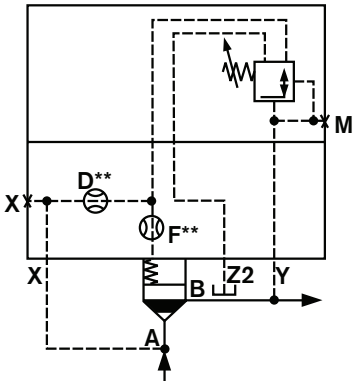

LFA..DR.-.../...
NS 16 to 63

Control cover with manual pressure adjustment

Port T - zero pressure

See pages 53; 54

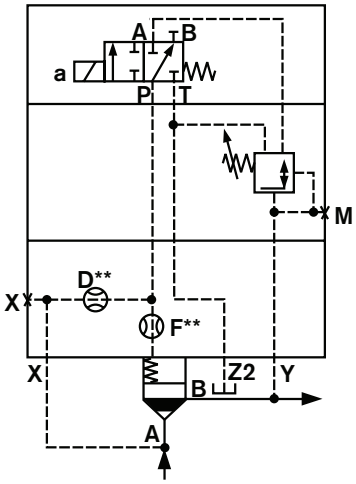

LFA..DRW.-.../...
NS 16 to 63

Control cover with manual pressure adjustment and isolating function

Port T - zero pressure

3WE 6 B9-../..
Solenoid de-energised → closed

Solenoid energised → pressure reducing function

See pages 55; 56

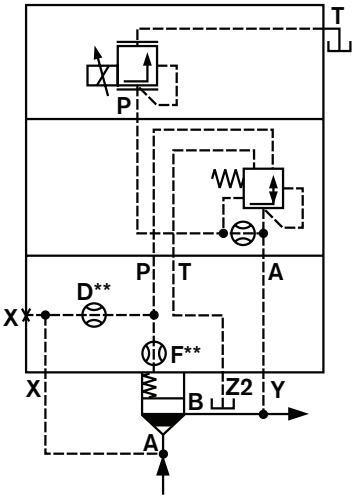

LFA..DREV-.../...
NS 25 to 63

Control cover for electrical-proportional pressure adjustment

Port T - zero pressure

See pages 57; 58

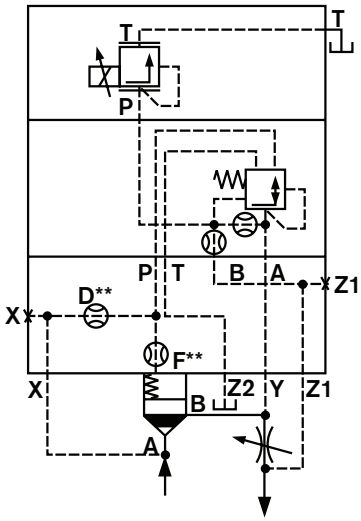

LFA..DREZ-.../...
NS 25 to 63

Control cover for electrical-proportional pressure adjustment

Port T - zero pressure

See pages 57; 58

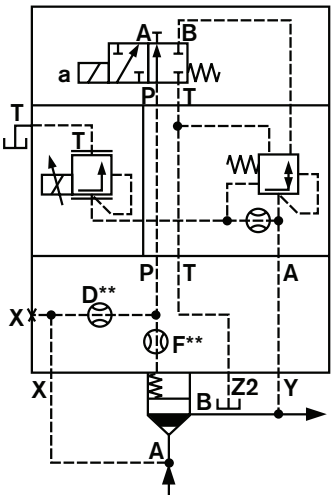

LFA..DREWV-.../...
NS 25 to 63

Control cover for electrical-proportional pressure adjustment and isolating function

Port T - zero pressure

3WE 6 A-../..
Solenoid de-energised →
closed

Solenoid energised → pressure reducing function

See pages 59; 60

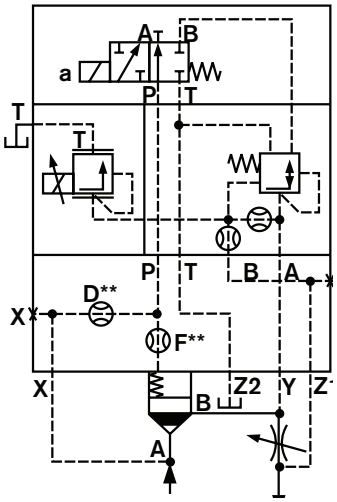

LFA..DREWZ-.../...
NS 25 to 63

Control cover for electrical-proportional pressure adjustment and isolating function

Port T - zero pressure

3WE 6 A-../..
Solenoid de-energised → closed

Solenoid energised → pressure reducing function

See pages 59; 60

The orifices built into the control covers are threaded type orifices. These are standard orifices. **No** type is entered in the ordering detail.

Orifice as shown within the main symbol

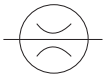

R-rings dimensions for ports X, Y, Z1, Z2 (are included within the scope of supply)

NS	Dimensions in mm	Material No.	
		NBR	FKM
16	8.41 x 1.40 x 1.78	R900025407	R900025408
25	9.81 x 1.50 x 1.78	R900017453	R900017610
32	11.18 x 1.60 x 1.78	R900017455	R900017611
40, 50	13.00 x 2.30 x 2.62	R900017457	R900017617
63	18.72 x 2.62 x 2.62	R900024445	R900024446
80	26.57 x 3.53 x 3.53	R900017466	R900017630
100	34.52 x 3.53 x 3.53	R900017472	R900017633

Seal kits for control cover type LFA../.. (NS 16 to 63)

Seal kit for LFA...		Material No.					
		NS 16		NS 25		NS 32	
		NBR	FKM	NBR	FKM	NBR	FKM
..DR..[1]	Pilot control ..DR6..	R900311273	R900311276	R900311273	R900311276	R900311273	R900311276
..DRW..[1]	Control cover ..DR.. LFA..DRW..	R900313701	R900313702	R900313703	R900313704	R900313705	R900313706
	Pilot control ..ZDR6..	R900314298	R900314299	R900314298	R900314299	R900314298	R900314299
DREV..; ..DREWV.. ..DREZ..; ..DREWZ..				R900313885	R900313886	R900313887	R900313888

Seal kit for LFA...		Material No.					
		NS 40		NS 50		NS 63	
		NBR	FKM	NBR	FKM	NBR	FKM
..DR..[1]	Pilot control ..DR6..	R900311273	R900311276	R900311273	R900311276	R900311273	R900311276
..DRW..[1]	Control cover ..DR.. LFA..DRW..	R900313889	R900313890	R900313889	R900313890	R900313891	R900313892
	Pilot control ..ZDR6..	R900314298	R900314299	R900314298	R900314299	R900314298	R900314299
DREV..; ..DREWV..[2] ..DREZ..; ..DREWZ..[2]		R900313881	R900313882	R900313881	R900313882	R900313883	R900313884

[1] The seals for the pilot valves (DR6..., ZDR...) are **not** included within the scope of supply.
[2] For pilot valve seal kits see the relevant catalogue sheet.

Fixing screws (are included within the scope of supply)

S.H.C.S. to DIN 912-10.9

NS	Qty.	Dimensions	Tightening torque in Nm
16	4	M 8 x 45	32
25	4	M 12 x 50	110
32	4	M 16 x 60	270
40	4	M 20 x 70	520
50	4	M 20 x 80	520
63	4	M 30 x 100	1800

Control covers for versions DR, DRW, DREV, DREZ, DREWV and DREWZ

Dimensions in mm (inches)

NS 16, 25, 32

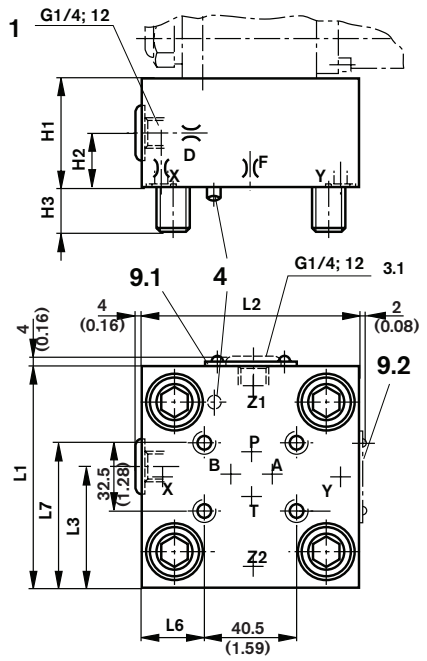

NS 40, 50

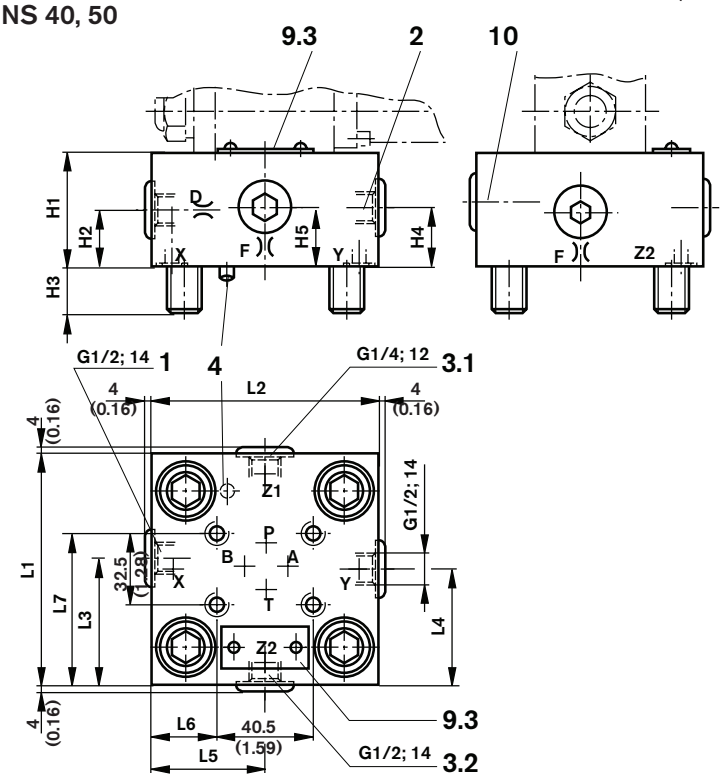

NS 63

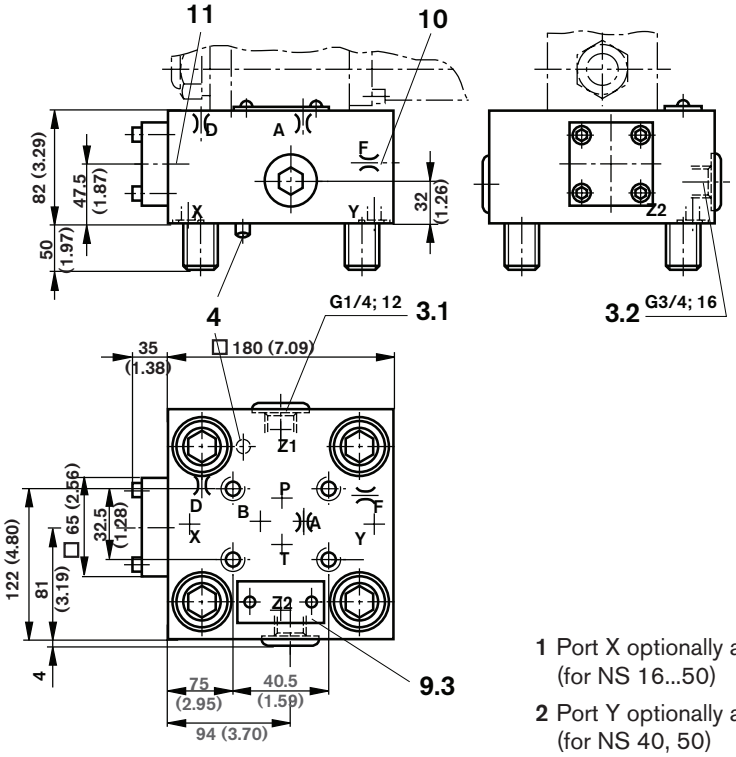

NS	16	25	32	40	50
H1	40 (1.57)	40 (1.57)	50 (1.97)	60 (2.36)	68 (2.68)
H2	17 (0.67)	19 (0.75)	26 (1.02)	30 (1.18)	32 (1.26)
H3	15 (0.59)	24 (0.94)	28 (1.10)	32 (1.26)	34 (1.34)
H4				40 (1.57)	32 (1.26)
H5				40 (1.57)	32 (1.26)
L1	65 (2.56)	85 (3.35)	100 (3.94)	125 (4.92)	140 (5.51)
L2	80 (3.15)	85 (3.35)	100 (3.94)	125 (4.92)	140 (5.51)
L3	36.5 (1.44)	49 (1.93)	56.5 (2.22)	72 (2.83)	80 (3.15)
L4				62.5 (2.46)	70 (2.76)
L5				62.5 (2.46)	70 (2.76)
L6	7 (0.28)	23.5 (0.93)	31 (1.22)	43.5 (1.71)	51 (2.01)
L7	49 (1.93)	59 (2.32)	66.5 (2.61)	79 (3.11)	86.5 (3.41)

1 Port X optionally as a threaded port (for NS 16...50)

2 Port Y optionally as a threaded port (for NS 40, 50)

3.1 Port Z1 optionally as threaded port (for LFA..DREZ.. , LFA..DREWZ..., NS 25..63)

3.2 Port Z2 optionally as threaded port (for NS 40, 50, 63)

4 Locating pin

9.1 Name plate (NS 16)

9.2 Name plate (NS 25, 32)

9.3 Name plate (NS 40, 50, 63)

10 Check valve (for NS 63 orifice F in poppet)

11 For control cover NS 63 Logic element NS 16

Control cover for pressure reducing functions

Main spool normally closed - LC..DB 40 D.. – separate order

NS 16 to 63

1	2	3	4	5	6	7	
LFA		DR	–	7X	/		

Nominal size 16 = **16**
Nominal size 25 = **25**
Nominal size 32 = **32**
Nominal size 40 = **40**
Nominal size 50 = **50**
Nominal size 63 = **63**

Adjustment type

Rotary knob = **1**
Set screw with hexagon and protective cap = **2**
Lockable rotary knob with scale = **3**[1)]
Rotary knob with scale = **4**

[1)] H-key to Material No. **R900008158** is included within the scope of supply

12 = SAE threaded external connections and UNC mounting bolts
– = Metric threaded connections

No code = NBR seals
V = FKM seals
(other seals on request)
Attention!
The compatibility of the seals and pressure fluid has to be taken into account!

025 = Max. secondary pressure 25 bar
075 = Max. secondary pressure 75 bar
150 = Max. secondary pressure 150 bar
210 = Max. secondary pressure 210 bar
315 = Max. secondary pressure 315 bar

7X = Series 7X (NS 16 to 63)

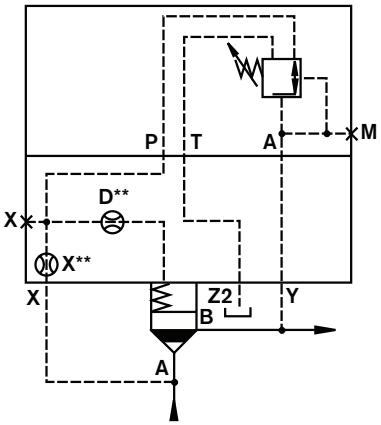

LFA..DR.-7X/...
NS 16

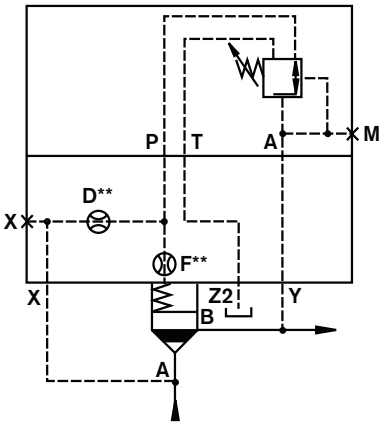

LFA..DR.-7X/...
NS 25, 32

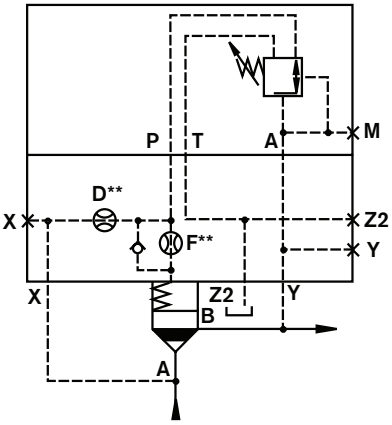

LFA..DR.-7X/...
NS 40, 50

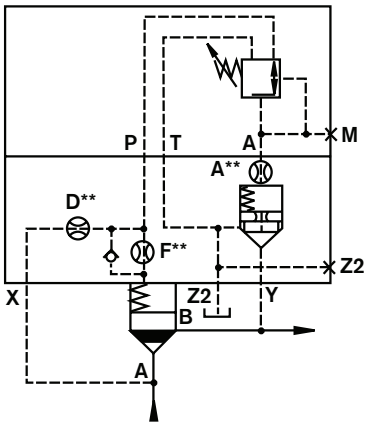

LFA..DR.-7X/...
NS 63

Control cover for pressure reducing functions

Dimensions in mm (inches)

Main spool normally closed - LC..DB 40 D.. – separate order

NS 16 to 63

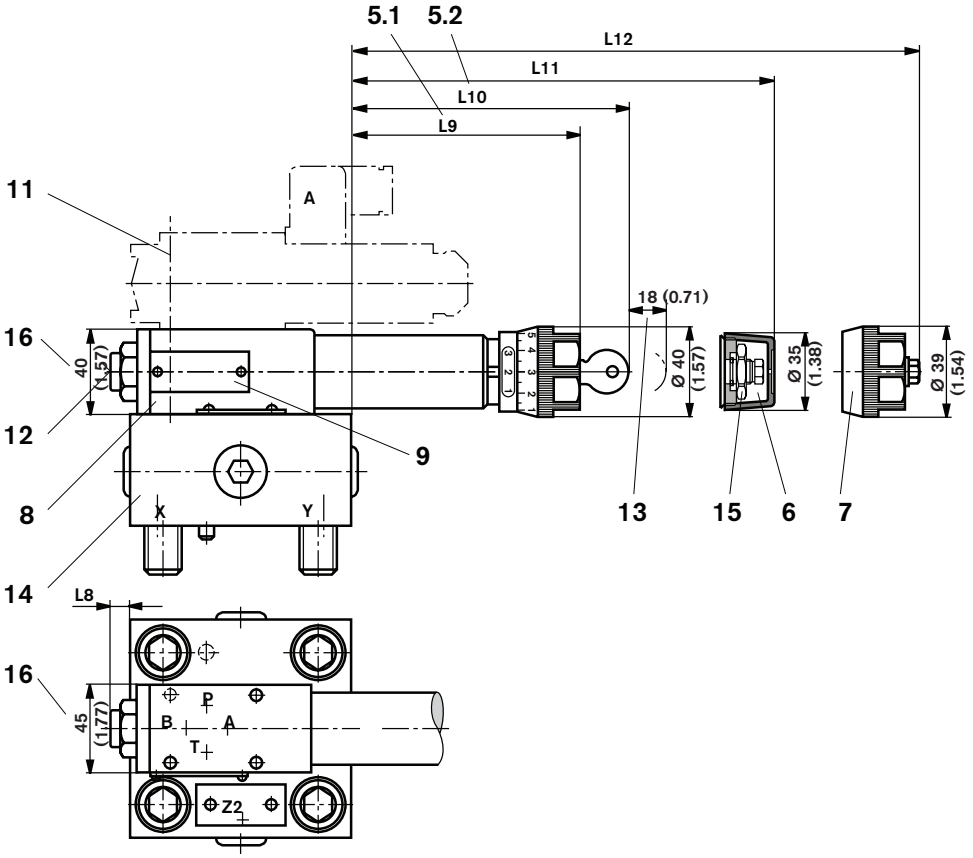

5.1 Adjustment element “4”
5.2 Adjustment element “3”
6 Adjustment element “2”
7 Adjustment element “1”
8 Direct operated pressure reducing valve (is included within the scope of supply)
9 Name plate for pressure reducing valves
11 Valve fixing screws M5x50 DIN 912-10.9 $M_A = 8.9$ Nm are included within the control cover scope of supply
12 Pressure gauge port G 1/4, 12 deep; Socket screw 6A/F
13 Space required to remove the key
14 Control cover, see page 52
15 Locknut 24A/F
16 For type .../315 → 50 mm

NS		16	25	32	40	50	63
A**[1]							2.0 (0.08)
F**[1]			0.8 (0.03)	1.0 (0.039)	1.2 (0.05)	1.5 (0.06)	1.5 (0.06)
X**[1]		2.5 (0.10)					
D**[2]		0.8 (0.03)	3.0 (0.12)	3.0 (0.12)	3.0 (0.12)	3.0 (0.12)	3.0 (0.12)
	.../315	0.8 (0.03)	1.8 (0.07)	1.8 (0.07)	1.8 (0.07)	1.8 (0.07)	1.8 (0.07)
L8		22 (0.87)	5.5 (0.22)				
	.../315	30.5 (1.20)	14 (0.55)	6 (0.24)			
L9		119.5 (4.70)	131 (5.16)	123.5 (4.86)	111 (4.37)	103.5 (4.07)	87.5 (3.44)
	.../315	116.5 (4.87)	128 (5.04)	120.5 (4.74)	108 (4.25)	100.5 (3.96)	84.5 (3.33)
L10		143.5 (5.65)	155 (6.10)	148.5 (5.85)	135 (5.31)	128.5 (5.06)	111.5 (4.39)
	.../315	140.5 (5.53)	152 (5.98)	145.5 (5.73)	132 (5.20)	125.5 (4.94)	108.5 (4.27)
L11		99.5 (3.92)	111 (4.37)	103.5 (4.07)	91 (3.58)	83.5 (3.29)	67.5 (2.66)
	.../315	96.5 (3.80)	108 (4.25)	100.5 (3.96)	88 (3.46)	80.5 (3.17)	64.5 (2.54)
L12		99.5 (3.92)	111 (4.37)	103.5 (4.07)	91 (3.58)	83.5 (3.29)	67.5 (2.66)
	../315	96.5 (3.80)	108 (4.25)	100.5 (3.96)	88 (3.46)	80.5 (3.17)	64.5 (2.54)
Special dim.		See page 52					

** Orifice Ø
[1] Orifice M6 tapered
[2] Orifice M6 tapered (NS16, 63), orifice M8 x 1 tapered (NS25...50)

Control cover for pressure reducing and isolating functions

Main spool normally closed - LC..DB 40 D.. – separate order

NS 16 to 63

1	2	3	4	5	6	7	
LFA		**DRW**		**7X**			

Nominal size 16 = **16**
Nominal size 25 = **25**
Nominal size 32 = **32**
Nominal size 40 = **40**
Nominal size 50 = **50**
Nominal size 63 = **63**

Adjustment type

Rotary knob = **1**
Set screw with hexagon and protection cap = **2**
Lockable rotary knob with scale = **3**[1)]
Rotary knob with scale = **4**

[1)] H-key for Material No. **R900008158** is included within scope of supply

12 = SAE threaded external connections and UNC mounting bolts
– = Metric threaded connections

No code = NBR seals
V = FKM seals
(other seals on request)

Attention!
The compatibility of the seals and pressure fluid has to be taken into account!

025 = Max. secondary pressure 25 bar
075 = Max. secondary pressure 75 bar
150 = Max. secondary pressure 150 bar
210 = Max. secondary pressure 210 bar
315 = Max. secondary pressure 315 bar

7X = Series 7X (NS 16 to 63)

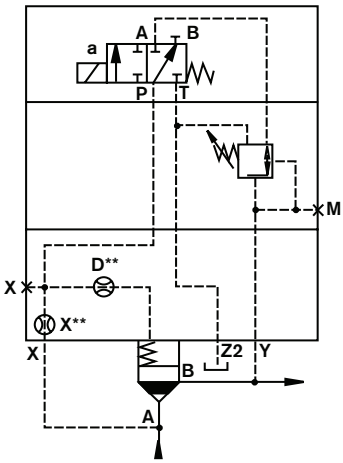

LFA..DRW.-7X/...
NS 16

3WE 6 B9-../..
Solenoid de-energised → closed
Solenoid energised → pressure reducing function

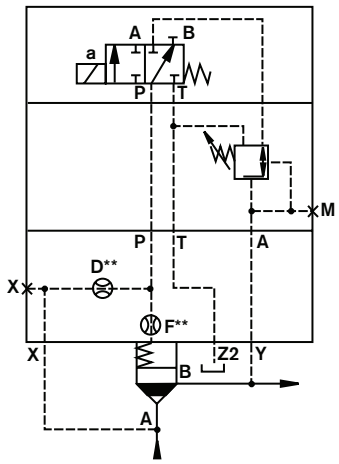

LFA..DRW.-7X/...
NS 25, 32

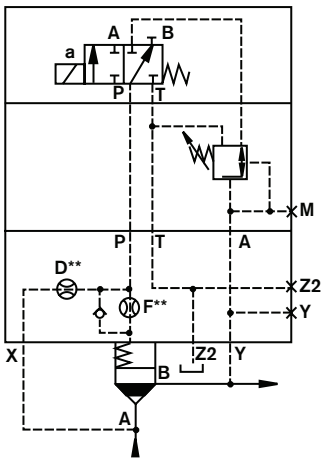

LFA..DRW.-7X/...
NS 40, 50

3WE 6 B9-../..
Solenoid de-energised → closed
Solenoid energised → pressure reducing function

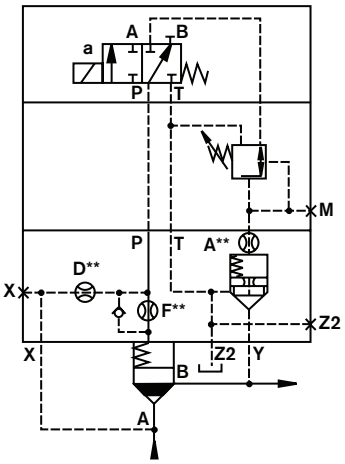

LFA..DRW.-7X/...
NS 63

Control cover for pressure reducing and isolating functions

Dimensions in mm (inches)

Main spool normally closed - LC..DB 40 D.. – separate order

NS 16 to 63

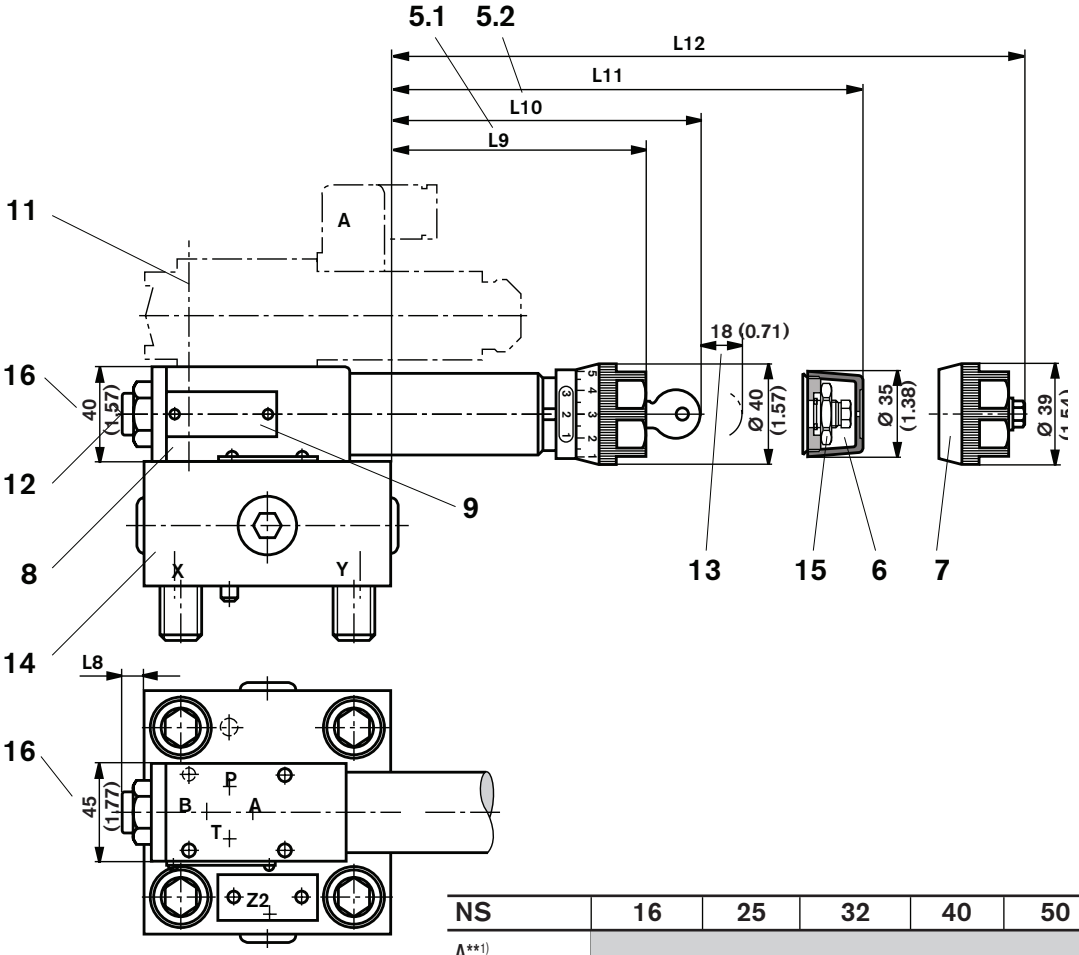

5.1 Adjustment element “4”

5.2 Adjustment element “3”

6 Adjustment element “2”

7 Adjustment element “1”

8 Direct operated pressure reducing valve (included within the scope of supply)

9 Pressure reducing valve name plate

11 Valve fixing screws M5x50 DIN 912-10.9 $M_A = 8.9$ Nm are included within the control cover scope of supply

12 Pressure gauge port G 1/4, 12 deep; Socket screw 6A/F

13 Space required to remove the key

14 Control cover, see page 52

15 Locknut 24A/F

16 For type .../315 → 50 mm

NS		16	25	32	40	50	63
A**[1]							2.0 (0.08)
X**[1]		2.5 (0.10)					
F**[1]			0.8 (0.03)	1.0 (0.039)	1.2 (0.05)	1.5 (0.06)	1.5 (0.06)
D**[2]		0.8 (0.03)	3.0 (0.12)	3.0 (0.12)	3.0 (0.12)	3.0 (0.12)	3.0 (0.12)
	.../315	0.8 (0.03)	1.8 (0.07)	1.8 (0.07)	1.8 (0.07)	1.8 (0.07)	1.8 (0.07)
L8		18 (0.71)	2 (0.08)				
	.../315	30.5 (1.20)	14 (0.55)	6 (0.24)			
L9		123.5 (4.86)	135 (5.31)	127.5 (5.02)	115 (4.53)	107.5 (4.23)	91.5 (3.6)
	.../315	116.5 (4.87)	128 (5.04)	120.5 (4.74)	108 (4.25)	100.5 (3.96)	84.5 (3.33)
L10		147.5 (5.81)	159 (6.26)	152.5 (6.00)	139 (5.47)	129.5 (5.10)	112.5 (4.43)
	.../315	140.5 (5.53)	152 (5.98)	145.5 (5.73)	132 (5.20)	125.5 (4.94)	108.5 (4.27)
L11		103.5 (4.07)	115 (4.53)	107.5 (4.23)	95 (3.74)	87.5 (3.44)	71.5 (2.81)
	.../315	96.5 (3.80)	108 (4.25)	100.5 (3.96)	88 (3.46)	80.5 (3.17)	64.5 (2.54)
L12		103.5 (4.07)	115 (4.53)	107.5 (4.23)	95 (3.74)	87.5 (3.44)	71.5 (2.81)
	../315	96.5 (3.80)	108 (4.25)	100.5 (3.96)	88 (3.46)	80.5 (3.17)	64.5 (2.54)
Special dim.		See page 52					

** Orifice Ø

[1] Orifice M6 tapered

[2] Orifice M6 tapered (NS16, 63), orifice M8 x 1 tapered (NS25...50)

Control cover for pressure reducing functions; electrical-proportional

Main spool normally closed - LC..DB 40 D.. – separate order

NS 25 to 63

1	2	3	5	6	7	
LFA			**– 7X**			

Nominal size 25 = **25**
Nominal size 32 = **32**
Nominal size 40 = **40**
Nominal size 50 = **50**
Nominal size 63 = **63**

Pressure reducing function; electrical-proportional = **DREV**

Pressure reducing function; electrical-prop. and possibility for 2-way flow control function = **DREZ**

Series 7X (NS 25 to 63) = **7X**

12 = SAE threaded external connections and UNC mounting bolts

– = Metric threaded connections

No code = NBR seals

V = FKM seals (other seals on request)

Attention!
The compatibility of the seals and pressure fluid has to be taken into account!

Pressure stages (pressure reducing valve)

006 = 7.0 bar (only for DREV)

014 = 16.0 bar (only flor DREZ)

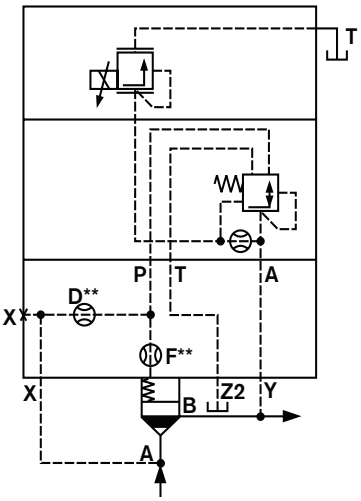

LFA..DREV-7X/006
NS 25, 32

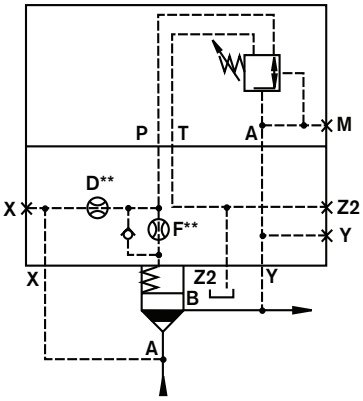

LFA..DREV-7X/006
NS 40, 50

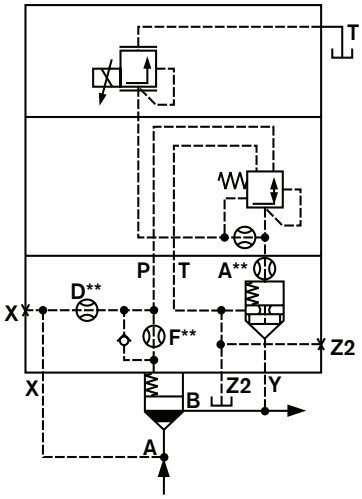

LFA..DREV-7X/006
NS 63

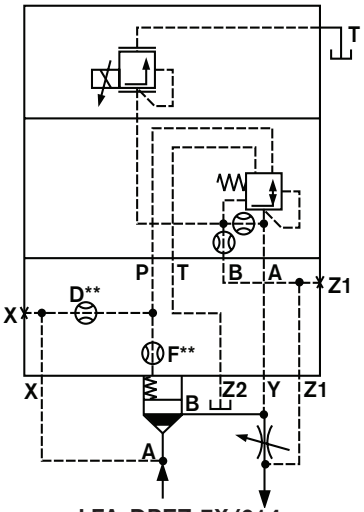

LFA..DREZ-7X/014
NS 25, 32

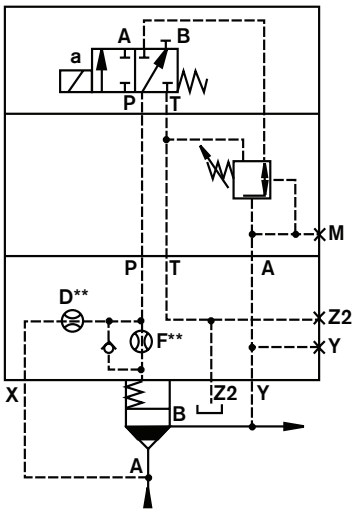

LFA..DREZ-7X/014
NS 40, 50

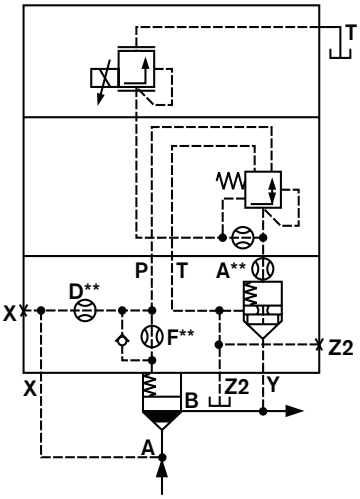

LFA..DREZ-7X/014
NS 63

Control cover for pressure reducing functions; electrical-proportional

Dimensions in mm (inches)

Main spool normally closed - LC..DB 40 D.. – separate order

NS 25 to 63

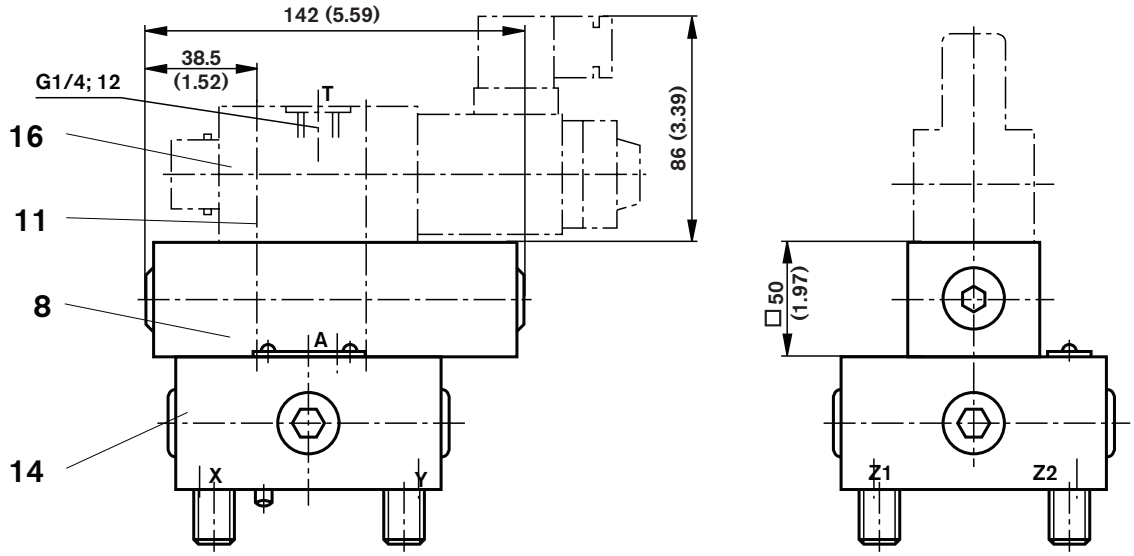

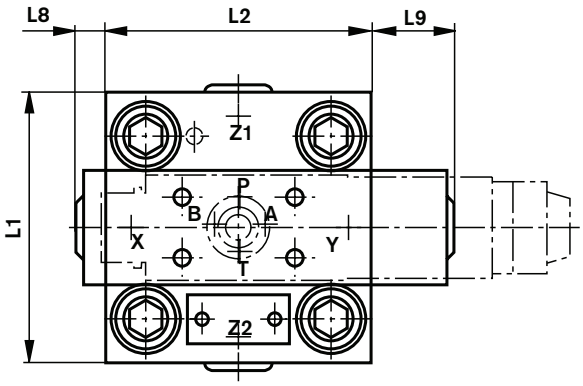

NS	A**[1]	F**[1]	D**[2]	L1	L2	L8	L9	Special dim.
25		0.8 (0.03)	1.5 (0.06)	85 (3.35)	85 (3.35)	15 (0.59)	42 (1.65)	
32		1.0 (0.039)	1.5 (0.06)	100 (3.94)	100 (3.94)	7.5 (0.29)	35 (1.38)	
40		1.2 (0.05)	1.8 (0.07)	125 (4.92)	125 (4.92)		22 (0.87)	See page 52
50		1.5 (0.06)	1.8 (0.07)	140 (5.51)	140 (5.51)		15 (0.59)	
63	2.0 (0.08)	1.5 (0.06)	1.8 (0.07)	180 (7.09)	180 (7.09)			

** Orifice Ø
[1] Orifice M6 tapered
[2] Orifice M8 x 1 tapered (NS25...50), orifice M6 tapered (NS63)

8 Pressure reducing valve (is included within the scope of supply)
11 Valve fixing screws M5 DIN 912-10.9 $M_A = 8.9$ Nm are included within the scope of supply
14 Control cover, see page 52
16 Proportional pressure relief valve DBET-6X/...YG24 [3] (must be ordered separately)

[3] Pressure stages for valve type:
DBET-6X/... 50, 100, 200, and 315 bar

Control cover for pressure reducing functions and isolating functions; electrical-proportional

Main spool normally closed - LC..DB 40 D.. – separate order

NS 25 to 63

1	2	3	5	6	7	
LFA		–	**7X**	/		

Nominal size 25 = **25**
Nominal size 32 = **32**
Nominal size 40 = **40**
Nominal size 50 = **50**
Nominal size 63 = **63**

Pressure reducing function, electrical-proportional and isolating function = **DREWV**

Pressure reducing function, electr.-prop. and isolating function, including possibility for 2-way flow control function = **DREWZ**

12 = SAE threaded external connections and UNC mounting bolts
– = Metric threaded connections

No code = NBR seals
V = FKM seals
(other seals on request)
Attention!
The compatibility of the seals and pressure fluid has to be taken into account!

Pressure stages
006 = 7.0 bar (only for DREWV)
014 = 16.0 bar (only for DREWZ)

= 7X Series 7X (NS 25 to 63)

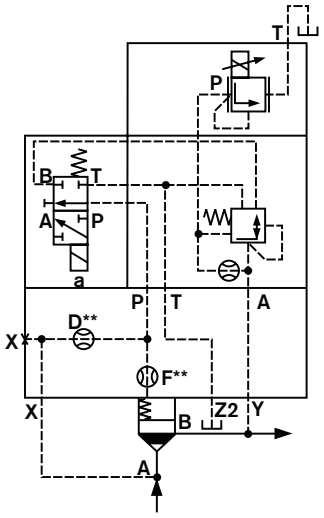

LFA..DREWV-7X/006
NS 25, 32

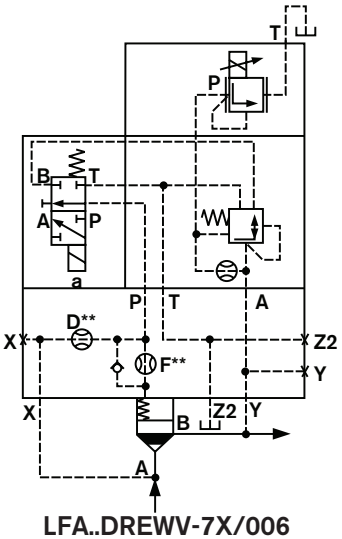

LFA..DREWV-7X/006
NS 40, 50

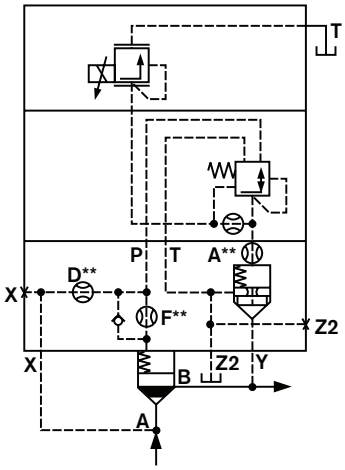

LFA..DREWV-7X/006
NS 63

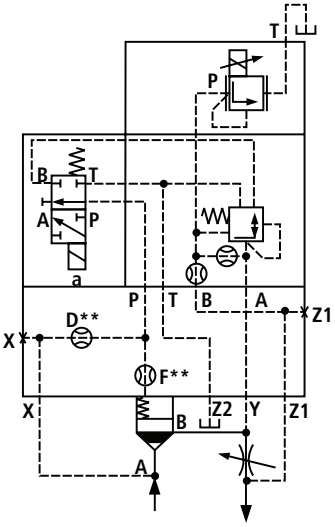

LFA..DREWZ-7X/014
NS 25, 32

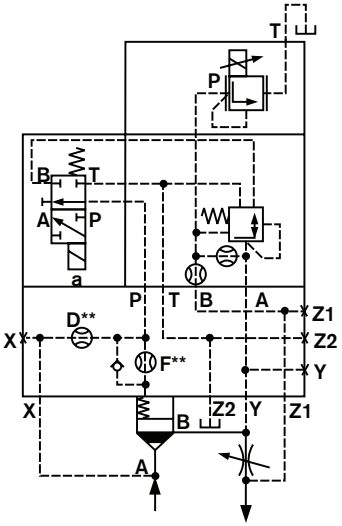

LFA..DREWZ-7X/014
NS 40, 50

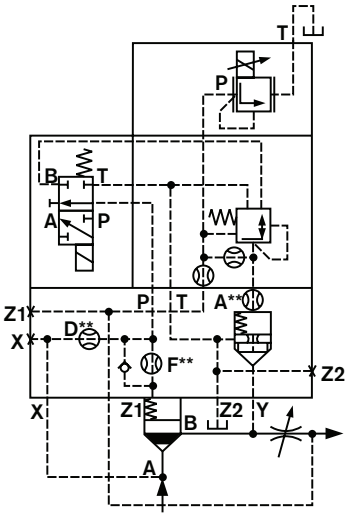

LFA..DREWZ-7X/014
NS 63

1 **3WE 6 A-../..** Solenoid de-energised → closed
Solenoid energised → pressure reducing function

Control cover for pressure reducing functions and isolating functions; electrical-proportional

Dimensions in mm (inches)

Main spool normally closed - LC..DB 40 D.. – separate order

NS 25 to 63

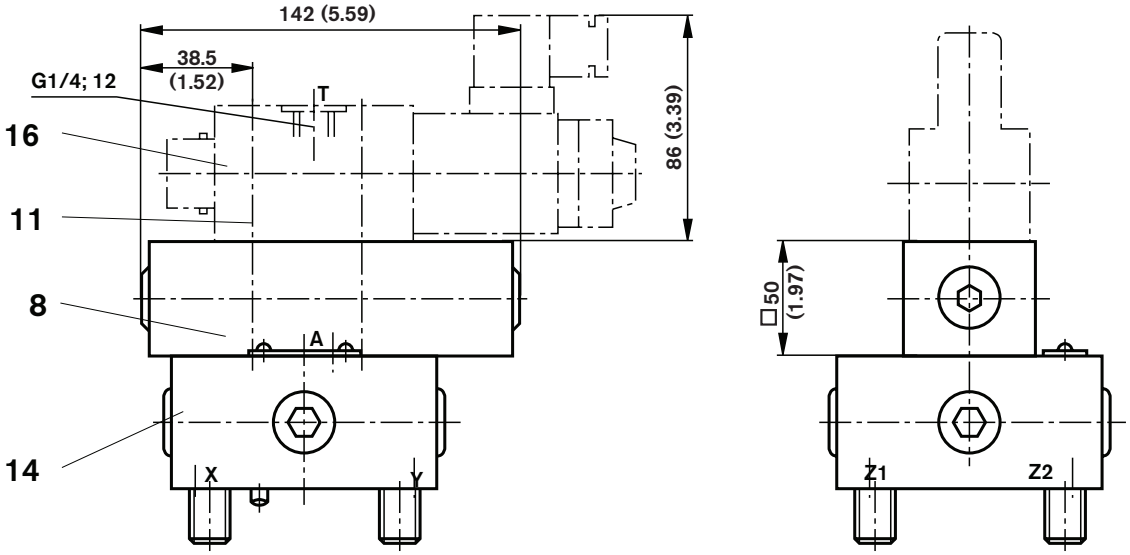

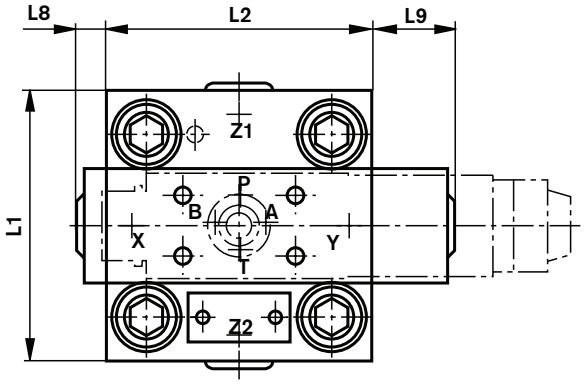

8 Pressured reducing valve (is included within the scope of supply)

11 Valve fixing screws M5 DIN 912-10.9 $M_A = 8.9$ Nm are included with the scope of supply

14 Control cover, see page 52

16 Proportional pressure relief valve DBET-6X/...YG24 [3] (must be ordered separately, see page 49)

17 Directional spool valve 3WE 6 A... (must be ordered separately, see page 49)

[3] Pressure stages of valve type: DBET-6X/... 50, 100, 200, and 315 bar

NS	A**[1]	F**[1]	D**[2]	L1	L2	L8	L9	L10	Special dim.
25		0.8 (0.03)	1.5 (0.06)	85 (3.35)	85 (3.35)	15 (0.59)	42 (1.65)	30 (1.18)	
32		1.0 (0.039)	1.5 (0.06)	100 (3.94)	100 (3.94)	7.5 (0.29)	35 (1.38)	37.5 (1.48)	
40		1.2 (0.05)	1.8 (0.07)	125 (4.92)	125 (4.92)		22 (0.87)	50 (1.97)	See page 52
50		1.5 (0.06)	1.8 (0.07)	140 (5.51)	140 (5.51)		15 (0.59)	57.5 (2.26)	
63	2.0 (0.08)	1.5 (0.06)	1.8 (0.07)	180 (7.09)	180 (7.09)			81.5 (3.21)	

** Orifice Ø

[1] Orifice M6 tapered

[2] Orifice M8 x 1 tapered (NS 25...50), orifice M6 tapered (NS 63)

Pressure sequencing functions

General information regarding control cover for pressure sequencing functions

1	2	3	4	5	6	7	8
LFA			—	7X	/		

• = Available

Nominal size					Type	Adjustment type	Series	Max. settable sequencing pressure in bar	Pilot oil supply	Seal material	Page
•	•	•	•	•	DZ			210		Ordering details	63, 64
•	•	•	•	•	DZWA			315		see pages	65, 66
•	•	•	•	•	DZWB			350		63 and 65	65, 66

5

Series

7X = Series 70 to 79

(unchanged installation and connection dimensions)

4

Adjustment type for pressure sequence valves

1 = Rotary knob
2 = Hexagon with protective cap
3 = Lockable rotary knob with scale
(H-key to automotive industry standard)
4 = Rotary knob with scale not lockable

For seal kits see page 62

Attention !

Control cover types LFA..DZ...are combined with 2-way cartridge valves type LC..DB...
(for ordering details see page 5)

7

Pilot oil supply

No code =
X =
Y =
XY =

Ordering details to symbol (see pages 63 and 65)

The orifices built into the control cover are threaded type orifices. These are standard orifices. **No** type coded is entered in the ordering code.

Orifice as shown within the main symbol

Attention ! Pilot valves (electrical directional spool valves type 4WE 6 D...) must be ordered separately, for further details see catalogue sheet RE 23 178.
Valve fixing screws M5 x 50 DIN 912-10.9, M_A = 8.9 Nm are included within the control cover scope of supply.

Directional spool valve (porting pattern to DIN 24 340 form A6)

Directional spool valve Type	NS	Catalogue sheet RE No.	Control cover Type
4WE 6 D../..	6	23 178	DZWA, DZWB

Overview of symbols (basic symbols), **pressure sequencing functions**

Valid symbols are shown in the following type descriptions !

Control cover with manual pressure adjustment and pressure dependent or pressure independent sequencing functions

Control cover with manual pressure adjustment

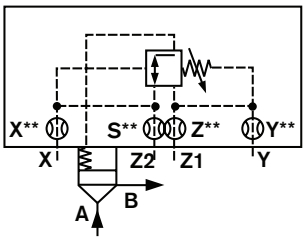

LFA..DZ.-../ 210 315 350

4 WE 6 D ../...

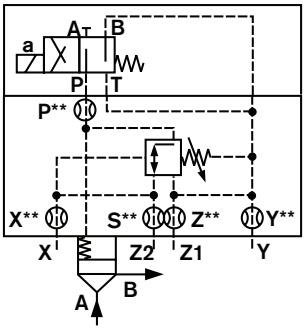

Solenoid de-energised: Sequencing function

LFA..DZWA.-../ 210 315 350

4 WE 6 D ../...

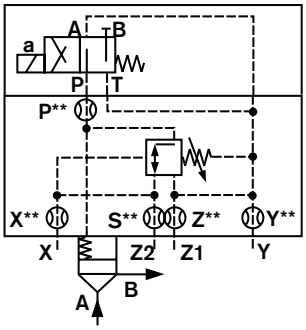

Solenoid energised: Sequencing function

LFA..DZWB.-../ 210 315 350

Control cover for pressure sequencing functions

Technical data (for applications outside these parameters, please consult us!)

Pressure fluid [1] Suitable for NBR **and** FKM seals [2] **Only** suitable for FKM seals		Mineral oil (HL, HLP) to DIN 51 524 [1]; Fast bio-degradable pressure fluids to VDMA 24 568 (also see RE 90 221); HETG (rape seed oil) [1]; HEPG (polyglycols) [2]; HEES (synthetic ester) [2]; Other pressure fluids on request
Pressure fluid temperature range	°C (°F)	– 30 to + 80 (– 86 to + 176) for NBR seals
		– 20 to + 80 – 68 to +176) for FKM seals
Viscosity range	mm^2/s (SUS)	2.8 to 380 (13 to 1761)
Cleanliness class to ISO code		Maximum permissible degree of contamination of the pressure fluid is to ISO 4406 (C) class 20/18/15 [3]

[3] The cleanliness class stated for the components must be adhered too in hydraulic systems. Effective filteration prevents faults from occurring and at the same time increases the component service life.
For the selection of filters see catalogue sheets RE 50 070, RE 50 076 and RE 50 081.

Control cover

Max. perm operating pressure im Anschluss ...		**Control cover type**		
		LFA..DZ.-../...	**LFA..DZW.-../...**	
			/.... **/...X**	**/...Y** **/...XY**
...X; ...Z2		315 bar (4569 PSI)		
...Y	When regulating the pressure	Zero pressure (up to ≈ 2 bar)		
	Static	315 bar (4569 PSI)	210 bar (3046 PSI) (=) [1] 160 bar (2321 PSI) (~) [1]	
...Z1	When regulating the pressure	Zero pressure (up to ≈ 2 bar)		
	Static	315 bar (4569 PSI)	210 bar (=) [1] (3046 PSI) (=) [1] 160 bar (~) [1] (2321 PSI) (~) [1]	315 bar (4569 PSI)
Settable sequencing pressure		210 315 350		

[1]) Max. perm. value 4WE 6 D

R-rings dimensions for ports X, Y, Z1, Z2 (are included within the scope of supply)

NS	**Dimensions in mm**	**Material No.**	
		NBR	**FKM**
16	8.41 x 1.40 x 1.78	R900025407	R900025408
25	9.81 x 1.50 x 1.78	R900017453	R900017610
32	11.18 x 1.60 x 1.78	R900017455	R900017611
40, 50	13.00 x 2.30 x 2.62	R900017457	R900017617

Seal kits for cartridge valves and control covers

Seal kits for cartridge valves
Type LC.. DB../... (NS 16 ... 50)

Seal kit for	Material No. NBR	Material No. FKM
LC 16 DB..7X/..	R900313104	R900313107
LC 25 DB..7X/..	R900313105	R900313108
LC 32 DB..7X/..	R900313106	R900313109
LC 40 DB..7X/..	R900873022	R900873025
LC 50 DB..7X/..	R900873023	R900873026

Seal kits for control cover
Type LFA.. /... (NS 16 ... 50)

Seal kit for LFA…	Material No. 16		25		32		40		50	
	NBR	FKM	NBR	FKM	NBR	FKM	NBR	FKM	NBR	FKM
...DZ... ...DZW...	R900860006		R900311540		R900311541		R900309378		R900312089	

Fixing screws (are included within the scope of supply)

S.H.C.S. to DIN 912-10.9

NS	Qty.	Dimensions	Tightening torque in Nm
16	4	M 8 x 115	32
25	4	M 12 x 120	110
32	4	M 16 x 120	270
40	4	M 20 x 70	520
50	4	M 20 x 80	520

Orifice thread size

all built-in orifices: M6 tapered

Control cover for pressure sequencing functions

NS 16 to 50

1	2	3	4	5	6	7	8	
LFA		DZ		7X	/			

Nominal size 16 = **16**
Nominal size 25 = **25**
Nominal size 32 = **32**
Nominal size 40 = **40**
Nominal size 50 = **50**

Adjustment type

Rotary knob = **1**
Hexagon with protective cap = **2**
Lockable rotary knob with scale = **3**
(H-key to automotive industry standards)
Rotary knob with scale **not** lockable = **4**

Series 7X (NS 16 to 50) = **7X**

Pressure stages (max. settable sequencing pressure)
210 bar = **210**
315 bar = **315**
350 bar = **350**

12 = SAE threaded external connections and UNC mounting bolts
– = Metric threaded connections

No code = NBR seals
V = FKM seals
(other seals on request)

Attention!
The compatibility of the seals and pressure fluid has to be taken into account!

Pilot oil supply

	Pilot oil supply	Pilot oil drain
No code =	Internal	Internal
X =	External	Internal
Y =	Internal	External
XY =	External	External

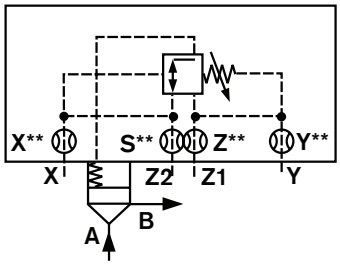

LFA..DZ.-../ 210 / 315 / 350

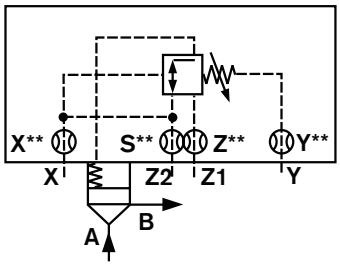

LFA..DZ.-../ 210 / 315 Y / 350

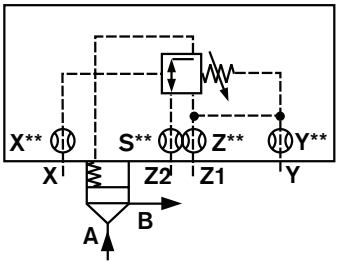

LFA..DZ.-../ 210 / 315 X / 350

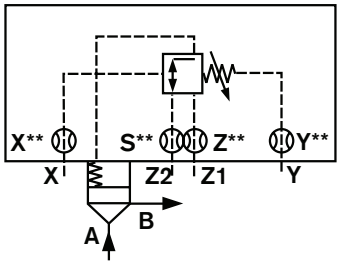

LFA..DZ.-../ 210 / 315 XY / 350

Control cover for pressure sequencing functions

Dimensions in mm (inches)

NS 16 to 50

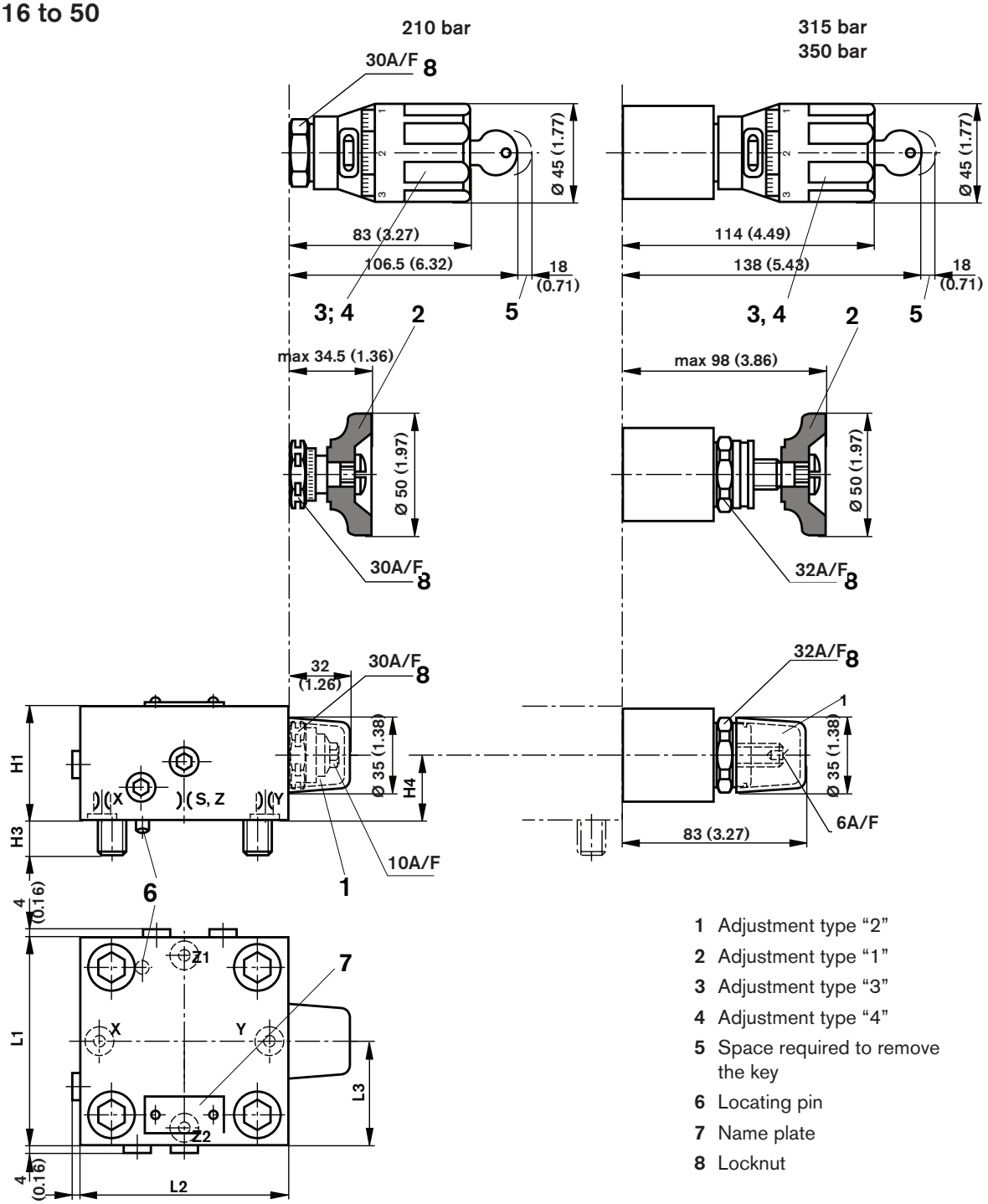

1 Adjustment type “2”
2 Adjustment type “1”
3 Adjustment type “3”
4 Adjustment type “4”
5 Space required to remove the key
6 Locating pin
7 Name plate
8 Locknut

NS	S**[1)]	X**[1)]	Y**[1)]	Z**[1)]	H1	H3	H4	L1	L2	L3
16	0.8 (0.03)	0.8 (0.03)	1.0 (0.039)	1.0 (0.039)	40 (1.57)	16 (0.63)	20 (0.79)	65 (2.56)	105 (4.13)	39.5 (1.56)
25	0.8 (0.03)	0.8 (0.03)	1.0 (0.039)	1.0 (0.039)	40 (1.57)	24 (0.94)	20 (0.79)	85 (3.35)	110 (4.33)	53 (2.09)
32	1.0 (0.039)	1.0 (0.039)	1.2 (0.05)	1.2 (0.05)	50 (1.97)	28 (1.10)	25 (0.98)	100 (3.94)	115 (4.53)	60.5 (2.38)
40	1.0 (0.039)	1.0 (0.039)	1.2 (0.05)	1.2 (0.05)	60 (2.36)	32 (1.26)	36 (1.42)	125 (4.92)	125 (4.92)	62.5 (2.46)
50	1.0 (0.039)	1.0 (0.039)	1.2 (0.05)	1.2 (0.05)	68 (2.68)	34 (1.34)	36 (1.42)	140 (5.51)	140 (5.51)	70 (2.76)

** Orifice Ø

1) All orifices M6 tapered

Control cover for pressure dependent and independent sequencing functions

NS 16 to 50

1	2	3	4	5	6	7	8	
LFA				7X				

Nominal size 16 = **16**
Nominal size 25 = **25**
Nominal size 32 = **32**
Nominal size 40 = **40**
Nominal size 50 = **50**

Solenoid de-energized: = **DZWA**
Pressure sequence function
Solenoid energized: Open

Solenoid energized: = **DZWB**
Pressure sequence function
Solenoid de-energized: Open

Adjustment type

Rotary knob = **1**
Hexagon with protective cap = **2**
Lockable rotary knob with scale (H-key to automotive industry standards) = **3**
Rotary knob with scale **not** lockable = **4**

Series 7X (NS 16 to 50) = **7X**

12 = SAE threaded external connections and UNC mounting bolts
– = Metric threaded connections

No code = NBR seals
V = FKM seals
(other seals on request)
Attention!
The compatibility of the seals and pressure fluid has to be taken into account!

Pilot oil supply

	Pilot oil supply	Pilot oil drain
No code =	Internal	Internal
X =	External	Internal
Y =	Internal	External
XY =	External	External

Pressure stages (max. settable sequencing pressure)
210 = 210 bar
315 = 315 bar
350 = 350 bar

4 WE 6 D ../..

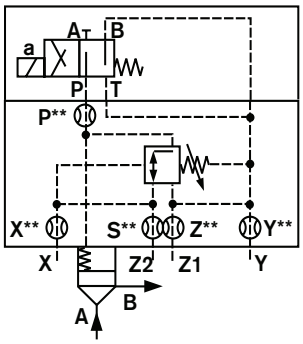

LFA..DZWA.-../ 210 315 350

4 WE 6 D ../..

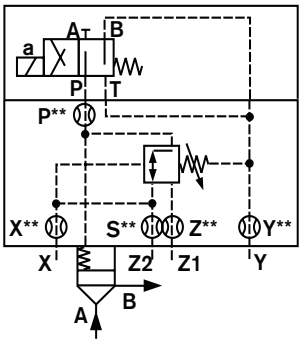

LFA..DZWA.-../ 210 315 Y 350

4 WE 6 D ../..

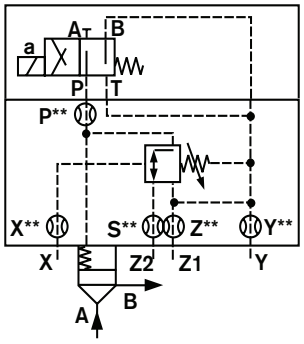

LFA..DZWA.-../ 210 315 X 350

4 WE 6 D ../..

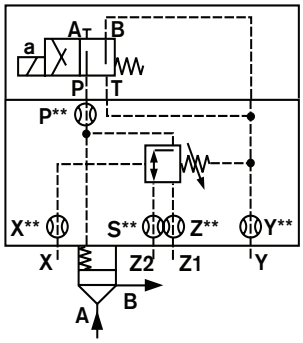

LFA..DZWA.-../ 210 315 XY 350

4 WE 6 D ../..

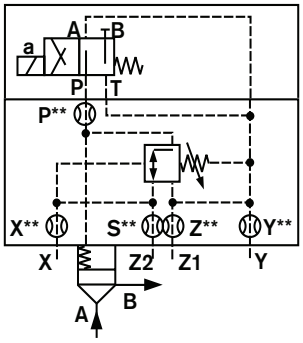

LFA..DZWB.-../ 210 315 350

4 WE 6 D ../..

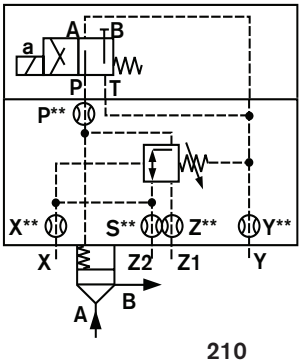

LFA..DZWB.-../ 210 315 Y 350

4 WE 6 D ../..

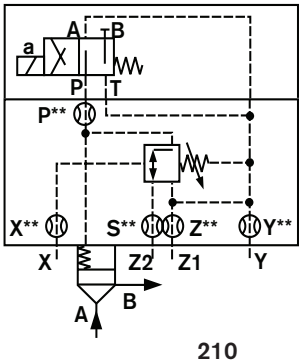

LFA..DZWB.-../ 210 315 X 350

4 WE 6 D ../..

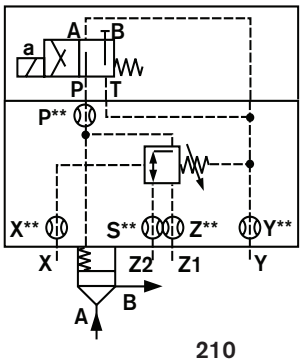

LFA..DZWB.-../ 210 315 XY 350

Control cover for pressure dependent and indpendent sequencing functions

Dimensions in mm (inches)

NS 16 to 50

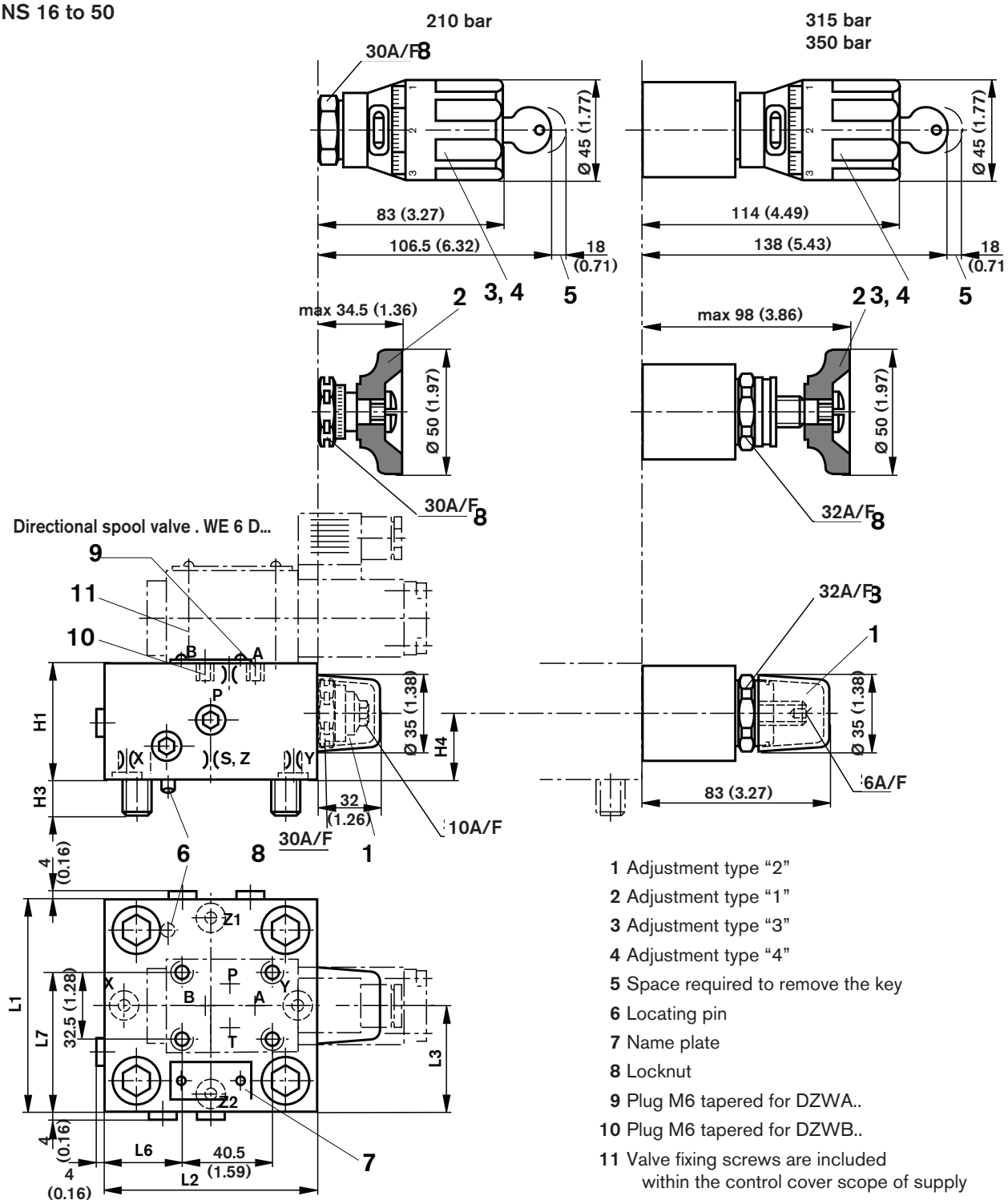

1 Adjustment type “2”
2 Adjustment type “1”
3 Adjustment type “3”
4 Adjustment type “4”
5 Space required to remove the key
6 Locating pin
7 Name plate
8 Locknut
9 Plug M6 tapered for DZWA..
10 Plug M6 tapered for DZWB..
11 Valve fixing screws are included within the control cover scope of supply

NS	S**[1)]	X**[1)]	Y**[1)]	Z**[1)]	H1	H3	H4	L1	L2	L3	L6	L7
16	0.8 (0.03)	0.8 (0.03)	1.0 (0.039)	1.0 (0.039)	40 (1.57)	16 (0.63)	20 (0.79)	65 (2.56)	105 (4.13)	39.5 (1.56)	16 (0.63)	49 (1.93)
25	0.8 (0.03)	0.8 (0.03)	1.0 (0.039)	1.0 (0.039)	40 (1.57)	24 (0.94)	20 (0.79)	85 (3.35)	110 (4.33)	53 (2.09)	21 (0.47)	59 (2.32)
32	1.0 (0.039)	1.0 (0.039)	1.2 (0.05)	1.2 (0.05)	50 (1.97)	28 (1.10)	25 (0.98)	100 (3.94)	115 (4.53)	60.5 (2.38)	26.5 (1.04)	66.5 (2.61)
40	1.0 (0.039)	1.0 (0.039)	1.2 (0.05)	1.2 (0.05)	60 (2.36)	32 (1.26)	36 (1.42)	125 (4.92)	125 (4.92)	62.5 (2.46)	55 (2.17)	76.4 (3.01)
50	1.0 (0.039)	1.0 (0.039)	1.2 (0.05)	1.2 (0.05)	68 (2.68)	34 (1.34)	36 (1.42)	140 (5.51)	140 (5.51)	70 (2.76)	70 (2.76)	84 (3.31)

** Orifice Ø

[1)] All orifices 6 tapered

Bosch Rexroth Corp.
Industrial Hydraulics
2315 City Line Road
Bethlehem, PA 18017-2131
USA
Telephone (610) 684-8300
Facsimile (610) 694-8467
www.boschrexroth-us.com

© 2004 Bosch Rexroth Corporation

All rights reserved. Neither this document nor any part of it may be reproduced, duplicated circulated or disseminated, whether by copy, electronic format or any other means, without the prior consent and authorization of Bosch Rexroth Corporation.

The data and illustrations in this brochure/data sheet are intended only to describe or depict the products. No representation or warranty, either express or implied, relating to merchantability or fitness for intended use, is given or intended by virtue of the information contained in this brochure/data sheet. The information contained in this brochure/data sheet in no way relieves the user of it obligation to insure the proper use of the products for a specific use or application. All products contained in this brochure/data sheet are subject to normal wear and tear from usage.

Subject to change.